OIL & STEEL
AERIAL PLATFORMS

CATALOGO PARTI DI RICAMBIO
Catalogue des pièces de rechange
Ersatzteilkatalog
Spare parts catalogue
Catalogo de piezas de repuesto

octopus 14

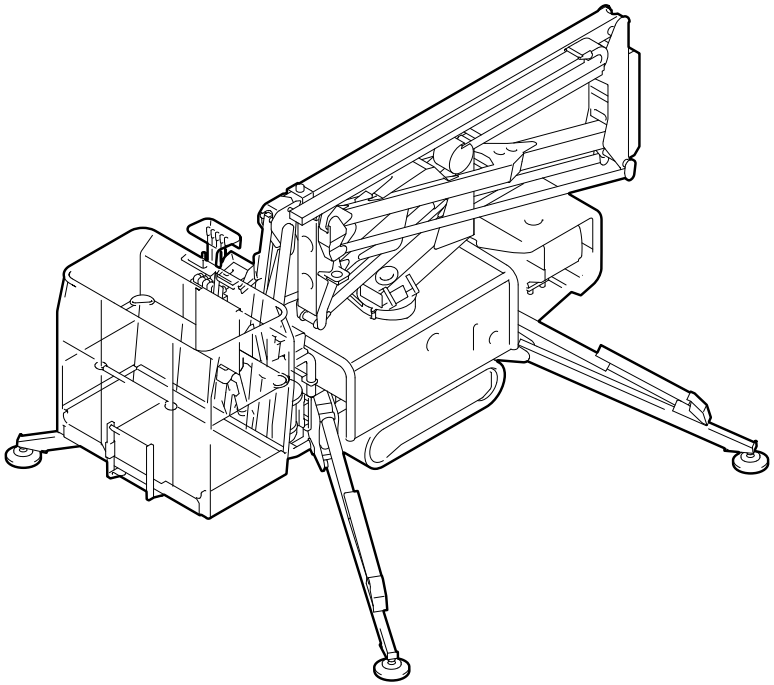

ESECUZIONE SPECIALE 63-17
EDITION SPECIALE 63-17
SONDERAUSFÜHRUNG 63-17
SPECIAL EDITION 63-17
EJECUCIÓN ESPECIAL 63-17

EDIZIONE / *EDITION* / **AUSGABE** / *EDITION* / **EDICION** **04/2018**

CODICE / *CODE* / **CODE** / *CODE* / **CODIGO** **5.748.794**

NORME PER LE ORDINAZIONI

- PER LA RICHIESTA DEI PARTICOLARI DI RICAMBIO SPECIFICARE:

- Codice del catalogo:	esempio	**5.748.794**
- Codice del ricambio:	" "	**4.225.102**
- Tav.:	" "	**TAV. OA6.01.1.0**
- Pos.:	" "	**2**
- Quantità:	" "	**1**
- Descrizione:	" "	**CARTUCCIA FILTRANTE**

NORMES POUR LES COMMANDES

- POUR DEMANDE DES PIECES DETACHEES PRECISER:

- Code catalogue:	exemple	**5.748.794**
- Code pièce détachée:	" "	**4.225.102**
- Tab.:	" "	**TAV. OA6.01.1.0**
- Pos.:	" "	**2**
- Quantité:	" "	**1**
- Désignation:	" "	**CARTOUCHE FILTRANTE**

BESTELLNORMEN

- BEI BESTELLUNG DER ERSATZTEILE BITTE WIE FOLGT ANGEBEN:

- Katalog-Code:	Beispiel	**5.748.794**
- Ersatzteil-Code:	" "	**4.225.102**
- Tab.:	" "	**TAV. OA6.01.1.0**
- Pos.:	" "	**2**
- Menge:	" "	**1**
- Benennung:	" "	**FILTEREINSATZ**

ORDERING INSTRUCTIONS

- ON REQUESTING SPARE PARTS PLEASE SPECIFY:

- Catalogue code:	example	**5.748.794**
- Spare part code	" "	**4.225.102**
- Tab.:	" "	**TAV. OA6.01.1.0**
- Pos.:	" "	**2**
- Quantity:	" "	**1**
- Description:	" "	**FILTERING CARTRIDGE**

NORMAS PARA LOS PEDIDOS

- PARA LA SOLICITUD DE REPUESTO ESPECIFICAR:

- Código del catalogo:	ejemplo	**5.748.794**
- Código del repuesto:	" "	**4.225.102**
- Tab.:	" "	**TAV. OA6.01.1.0**
- Pos.:	" "	**2**
- Cantidad:	" "	**1**
- Denominaciones:	" "	**CARTUCHO FILTRANTE**

INDICE DELLE TAVOLE - *INDEX DES TABLES* - TAFELVERZEICHNIS
TABLES INDEX - INDICE DE TABLAS

TAV. OA1.01.1.0
TELAIO
FAUX-CHASSIS
RAHMEN
FRAME
ARMAZON

TAV. OA1.01.2.0
TELAIO
FAUX-CHASSIS
RAHMEN
FRAME
ARMAZON

TAV. OA1.02.1.0
TELAIO - CARRO ALLARGABILE
CHÂSSIS - CHARIOT ELARGISSABLE
RAHMEN - VERBREITERBARE WAGEN
FRAME - EXTENDIBLE CARRIAGE
ARMAZÓN - CARRO ENSANCHABLE

TAV. OA2.01.1.0
STABILIZZATORI
STABILISATEURS
STABILISATOREN
OUTRIGGERS
ESTABILIZADORES

TAV. OA3.01.1.0
MOTORE HONDA
MOTEUR HONDA
HONDA MOTOR
HONDA MOTOR
MOTOR HONDA

TAV. OA4.01.1.0
MOTORE DIESEL
MOTEUR DIESEL
DIESEL MOTOR
DIESEL MOTOR
MOTOR DIESEL

TAV. OA5.01.1.0
GRUPPO BATTERIE
GROUPE BATTERIES
BATTERIENGRUPPE
BATTERIES GROUP
GRUPO BATERIAS

TAV. OA6.01.1.0
SERBATOIO OLIO
RESERVOIR D'HUILE
ÖLBEHÄLTER
OIL TANK
DEPOSITO ACEITE

TAV. OB1.01.1.0
TORRETTA
TOURELLE
TURM
TURRET
TORRE

TAV. OC1.01.1.0
ROTAZIONE TORRETTA
ROTATION TOURELLE
TURMROTATION
TURRET ROTATION
ROTACION TORRE

TAV. OD1.01.1.0
BRACCIO ARTICOLATO
BRAS ARTICULE
AUSLEGARM
ARTICULED BOOMS SECTION
BRAZO ARTICULADO

TAV. OD1.02.1.0
BRACCIO ARTICOLATO
BRAS ARTICULE
AUSLEGARM
ARTICULED BOOMS SECTION
BRAZO ARTICULADO

TAV. OE1.01.1.0
1° BRACCIO
PREMIER BRAS
ERSTE AUSLEGER
FIRST BOOM
PRIMER BRAZO

TAV. OE2.01.1.0
2° BRACCIO
DEUXIEME BRAS
ZWEITE AUSLEGER
SECOND BOOM
SEGUNDO BRAZO

TAV. OF1.01.1.0
CANALETTA PORTA-TUBI
CANALISATION PORTE TUBES
SCHLAUCHHALTER - KANAL
HOLDER-HOSES EACEWAY
CANALIZACION PORTA-TUBOS

TAV. OG1.01.1.0
GRUPPO “JIB”
GROUPE “JIB”
“JIB”-GRUPPE
“JIB”-GROUP
GRUPO “JIB”

TAV. OI1.01.1.0
SUPPORTO PIATTAFORMA DI LAVORO
SUPPORT PLATE-FORME DE TRAVAIL
ARBEITSPLATTFORMHALTER
WORK PLATFORM SUPPORT
SOPORTE PLATAFORMA DE TRABAJO

TAV. OI2.01.1.0
PIATTAFORMA DI LAVORO
PLATE-FORME DE TRAVAIL
ARBEITSPLATTFORM
WORK PLATFORM
PLATAFORMA DE TRABAJO

TAV. OL1.01.1.0
ASPIRAZIONE / MANDATA
ASPIRATION / DEBIT
ZUGKRAFT / EINLASS
SUCTION / DELIVERY
ASPIRACION / ENVIO

TAV. OL1.02.1.0
ASPIRAZIONE / MANDATA
ASPIRATION / DEBIT
ZUGKRAFT / EINLASS
SUCTION / DELIVERY
ASPIRACION / ENVIO

TAV. OL1.10.1.0
ASPIRAZIONE / MANDATA (VERSIONE BATTERIE)
ASPIRATION / DEBIT (VERS. BATTERIES)
ZUGKRAFT / EINLASS (BATTERIEVERS.)
SUCTION / DELIVERY (BATTERY VERS.)
ASPIRACION / ENVIO (VERS: BATERIAS)

TAV. OM1.01.1.0
MANDATA E SCARICO
DEBIT ET DECHARGE
EINLASS UND AUSLASS
DELIVERY AND DISCHARGE
ENVIO Y DESCARGA

TAV. OM1.01.2.0
MANDATA E SCARICO
DEBIT ET DECHARGE
EINLASS UND AUSLASS
DELIVERY AND DISCHARGE
ENVIO Y DESCARGA

TAV. OM1.01.3.0
MANDATA E SCARICO
DEBIT ET DECHARGE
EINLASS UND AUSLASS
DELIVERY AND DISCHARGE
ENVIO Y DESCARGA

TAV. OM2.01.1.0
IMPIANTO OLEODINAMICO MOTORI TRASLAZIONE
SYST. HYDR. MOTEURS TRANSLATION
ÖLDYN. ANLAGE FAHRMOTOREN
TRAVERSE ENGINE OIL-PRESSURE SYST.
INST. OLEOD. MOTORES TRANSLACION

TAV. OM3.01.1.0
IMPIANTO OLEODINAMICO ALLARGAMENTO CINGOLI
SYST. HYDR. ELARGISSEMENT CHENILLES
RAUPENWEITERUNG - HYDRAULIK
TRUCKS WIDENING HYDRAULIC SYSTEM
INST. HIDR. ENSANCHAMIENTO ORUGAS

TAV. OM4.01.1.0
IMPIANTO OLEODINAMICO MARTINETTI STABILIZZATORI
SYST. HYDR. VERINS STABILISATEURS
STÜTZBEINZYL. - ÖLEOD. ANLAGE
OUTRIGGER CYL. OIL-PRESSURE SYS.
INST. OLEODIN. GATOS DE APOYO

TAV. OM4.02.1.0
IMPIANTO OLEODINAMICO MARTINETTI STABILIZZATORI
SYST. HYDR. VERINS STABILISATEURS
STÜTZBEINZYL. - ÖLEOD. ANLAGE
OUTRIGGER CYL. OIL-PRESSURE SYS.
INST. OLEODIN. GATOS DE APOYO

TAV. OM5.01.1.0
IMPIANTO OLEODINAMICO ROTAZIONE TORRETTA
SYSTEME HYDR. ROTATION TOURELLE
TURMROTATIONSHYDRAULIK
TURRET ROTATION HYDRAULIC SYSTEM
EQUIPO OLEOD. ROTACION TORRE

TAV. OM6.01.1.0
IMP. OLEOD. BRANDEGGIO BRACCI ARTICOLATI
CIRCUIT HYDR. PIVOTEMENT DES BRAS ARTICULES
HYDR. ANL. ZUR SCHWENKUNG DER AUSLEGEARME
ARTICULATED BOOMS SLEWING HYD. SYS.
SISTEMA HIDR. ROTACION BRAZOS ARTICULADOS

TAV. OM7.01.1.0
IMPIANTO OLEODINAMICO BRANDEGGIO BRACCI
SYSTEME HYDR. ARTICULATION BRAS
HYDRAULIK FÜR ARMSCHWENKUNG
ARTICULATION BOOMS HYDRAULIC SYSTEM
EQUIPO OLEODIN. OSCILACION BRAZOS

TAV. OM8.01.1.0
IMPIANTO OLEDINAMICO MARTINETTO SFILO BRACCI
SYSTEME HYDR. VERIN TELESCOPAGE BRAS
HYDRAULIK FÜR AUSZIEHENZYLINDER DER ARME
BOOMS EXTENSION CYLINDER HYDR. SYSTEM
EQUIPO OLEODIN. GATO EXTENSION BRAZOS

TAV. OM9.01.1.0
IMPIANTO OLEODINAMICO “JIB”
SYSTEME HYDRAULIQUE “JIB”
“JIB”-HYDRAULIK
“JIB”-HYDRAULIC SYSTEM
EQUIPO OLEODINAMICO “JIB”

TAV. OM10.01.1.0
IMPIANTO OLEODINAMICO BILANCIAMENTO
SYSTEME HYDRAULIQUE NIVELLEMENT
HYDRAULIK FÜR NIVELLIERUNG
LEVELLING HYDRAULIC SYSTEM
EQUIPO OLEODINAMICO NIVELACION

TAV. OM11.01.1.0
IMPIANTO ARIA COMPRESSA - ACQUA
INSTALLATION AIR COMPRIME - EAU
DRUCKLUFTANLAGE - WASSER
COMPRESSED AIR SYSTEM - WATER
INSTALACION AIRE COMPRIMIDO - AGUA

TAV. ON1.01.1.0
IMPIANTO ELETTRICO
INSTALLATION ELECTRIQUE
ELEKTRISCHE ANLAGE
ELECTRIC SYSTEM
INSTALACION ELECTRICA

TAV. ON2.01.1.0
IMPIANTO ELETTRICO
INSTALLATION ELECTRIQUE
ELEKTRISCHE ANLAGE
ELECTRIC SYSTEM
INSTALACION ELECTRICA

TAV. ON2.01.1.0
IMPIANTO ELETTRICO
INSTALLATION ELECTRIQUE
ELEKTRISCHE ANLAGE
ELECTRIC SYSTEM
INSTALACION ELECTRICA

TAV. ON3.01.1.0
COMANDI A DISTANZA
COMMANDES A DISTANCE
FERNSTEUERUNGEN
REMOTE CONTROLS
MANDOS A DISTANCIA

TAV. ON4.01.1.0
CONNETTORI
CONNECTEURS
VERBINDER
CONNECTIONS
CONEXIONES

TAV. ON5.01.1.0
CONNETTORI (AMP)
CONNECTEURS (AMP)
VERBINDER (AMP)
CONNECTIONS (AMP)
CONEXIONES (AMP)

TAV. ON6.01.1.0
CONNETTORI (M12)
CONNECTEURS (M12)
VERBINDER (M12)
CONNECTIONS (M12)
CONEXIONES (M12)

TAV. OQ1.01.1.0
TARGHETTE
AUTOCOLLANTS
SCHILDER
DECALS
ETIQUETAS

TAV. OV1.01.1.0
ELETTROPOMPA - OPZIONALE
ELECTROPOMPE - OPTION
ELEKTROPUMPE - ZUBEHÖR
ELECTRO PUMP - OPTIONAL
ELECTRO BOMBA - OPCIONAL

TELAIO

FAUX-CHASSIS *FRAME*
RAHMEN *ARMAZON*

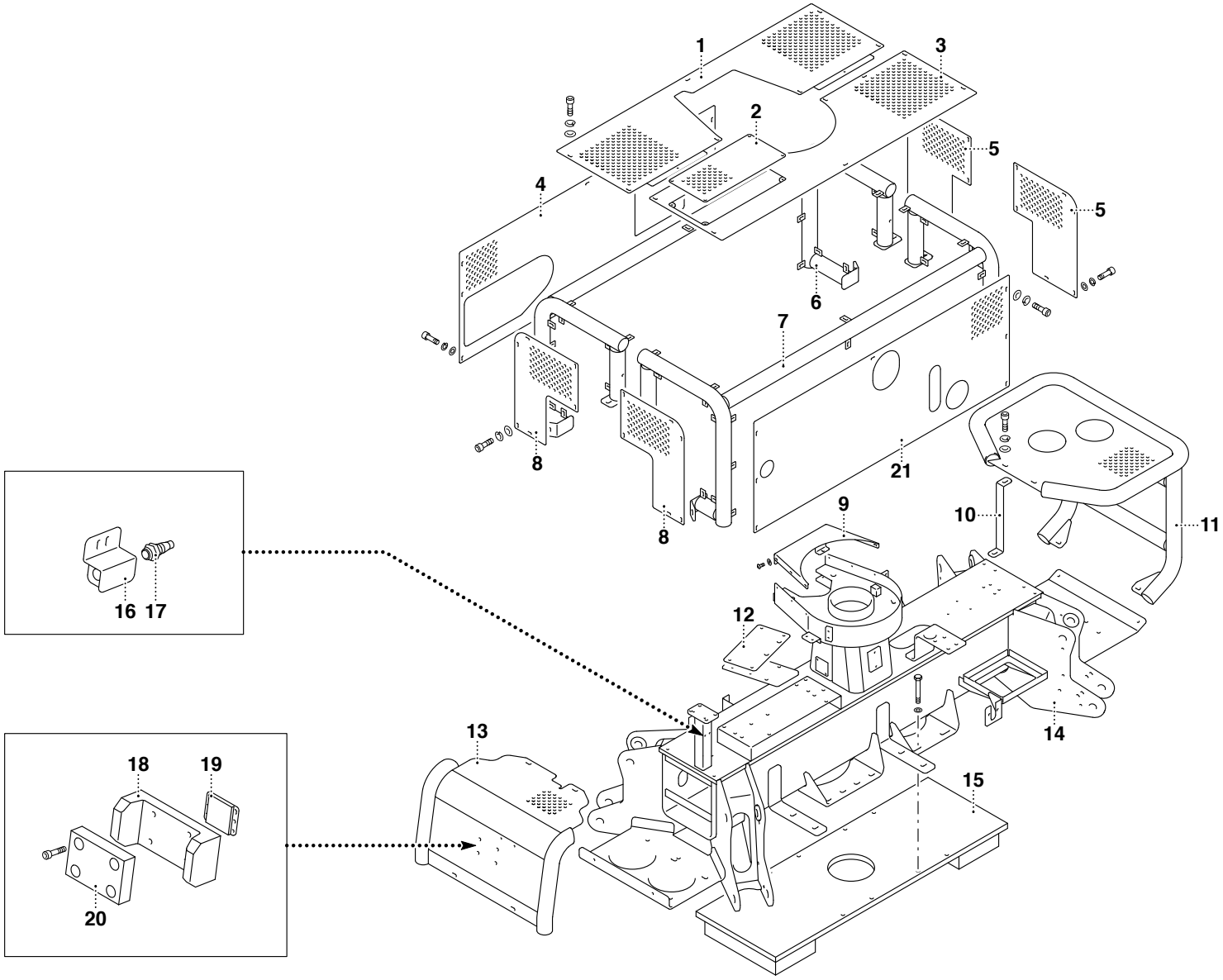

UN07-R-1390-CO

TAV. OA1.01.1.0

POS.	N° CODICE	Q.	DESCRIZIONE	DESIGNATION	BENENNUNG	DESCRIPTION	DENOMINACIONES
1	6.301.061	1	PROTEZIONE	PROTECTION	SCHUTZ	GUARD	PROTECCION
2	7.301.063	1	COPERCHIO	COUVERCLE	DECKEL	COVER	TAPA
3	6.301.062	1	PROTEZIONE	PROTECTION	SCHUTZ	GUARD	PROTECCION
4	7.301.060	1	PROTEZIONE	PROTECTION	SCHUTZ	GUARD	PROTECCION
5	7.301.066	2	PROTEZIONE	PROTECTION	SCHUTZ	GUARD	PROTECCION
6	6.736.301	1	SUPPORTO	SUPPORT	TRÄGER	SUPPORT	SOPORTE
7	6.736.300	1	SUPPORTO	SUPPORT	TRÄGER	SUPPORT	SOPORTE
8	7.301.065	2	PROTEZIONE	PROTECTION	SCHUTZ	GUARD	PROTECCION
9	7.300.650	1	CARTER	CARTER	GEHÄUSE	CASING	CARTER
10	7.736.194	2	SUPPORTO	SUPPORT	TRÄGER	SUPPORT	SOPORTE
11	6.301.068	1	CARTER	CARTER	GEHÄUSE	CASING	CARTER
12	7.736.286	1	SUPPORTO	SUPPORT	TRÄGER	SUPPORT	SOPORTE
13	6.301.067	1	CARTER	CARTER	GEHÄUSE	CASING	CARTER
14	6.750.252	1	TELAIO	CHASSIS	RAHMEN	FRAME	CHASIS
15	6.830.059	1	ZAVORRA	LEST	BALLAST	COUNTERWEIGHT	LASTRE
16	6.736.174	1	SUPPORTO	SUPPORT	TRÄGER	SUPPORT	SOPORTE
17	4.510.090	1	SENSORE	CAPTEUR	SENSOR	SENSOR	SENSOR
18	7.575.682	1	PATTINO	PATIN	GLEITPLATTE	SLIDING BLOCK	PATIN
19	4.510.092	1	SENSORE	CAPTEUR	SENSOR	SENSOR	SENSOR
20	4.575.683	1	PATTINO	PATIN	GLEITPLATTE	SLIDING BLOCK	PATIN

TELAIO

FAUX-CHASSIS
RAHMEN

FRAME
ARMAZON

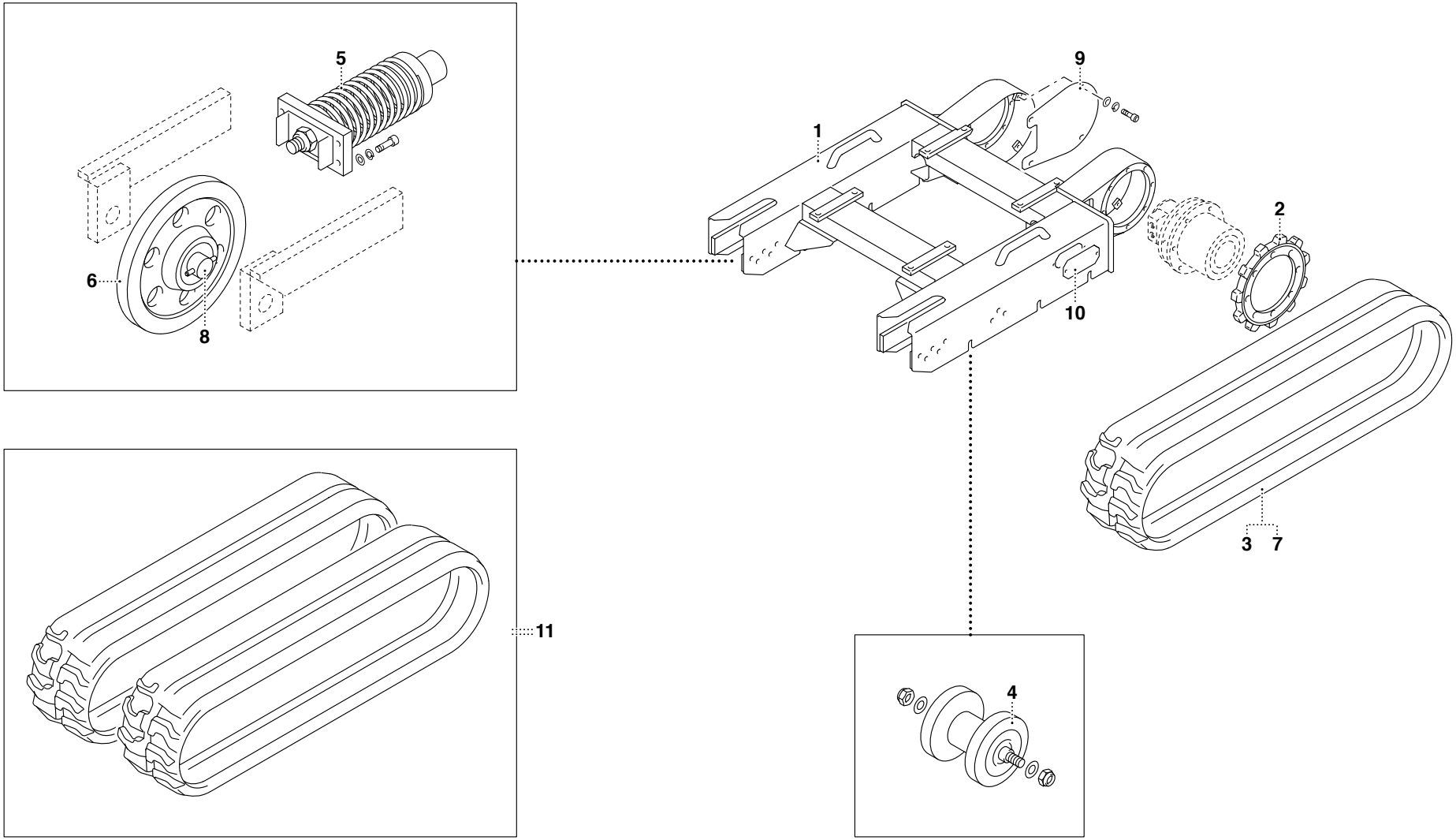

TAV. OA1.01.2.0

POS.	N° CODICE	Q.	DESCRIZIONE	DESIGNATION	BENENNUNG	DESCRIPTION	DENOMINACIONES
1	6.750.263	1	TELAIO	CHASSIS	RAHMEN	FRAME	CHASIS
2	7.680.036	2	CORONA	COURONNE	KRANZ	CROWN	CORONA
3	4.271.027	2	NASTRO “NERO”	RUBAN “NOIR”	BAND “SCHWARZ”	BAND “BLACK”	CINTA “NEGRA”
4	7.670.063	6	RULLO	GALET	ROLLE	ROLLER	RODILLO
5	4.760.016	2	TENDITORE	TENDEUR	SPANNER	TENSIONER	TENSOR
6	7.675.009	2	RUOTA	ROUE	RAD	WHEEL	RUEDA
7	4.271.008	2	NASTRO “BIANCO”	RUBAN “BLANC”	BAND “WEISS”	BAND “WITHE”	CINTA “BLANCA”
8	7.580.729	2	PERNO	AXE	BOLZEN	PIN	PERNO
9	7.300.873	2	COPERCHIO	COUVERCLE	DECKEL	COVER	TAPA
10	7.300.872	2	COPERCHIO	COUVERCLE	DECKEL	COVER	TAPA
11	2.451.052	1	COPPIA NASTRI “NERI”	COPUPLE RUBANS “NOIR”	BÄNDER “SCHWARZ” PAAR	PAIR OF BANDS “BLACK”	PAR DE CINTAS “NEGRA”

OIL&STEEL

TELAIO - CARRO ALLARGABILE

CHÂSSIS - CHARIOT ELARGISSABLE *FRAME - EXTENDIBLE CARRIAGE*
RAHMEN - VERBREITERBARE WAGEN *ARMAZÓN - CARRO ENSANCHABLE*

TAV. OA1.02.1.0

octopus 14

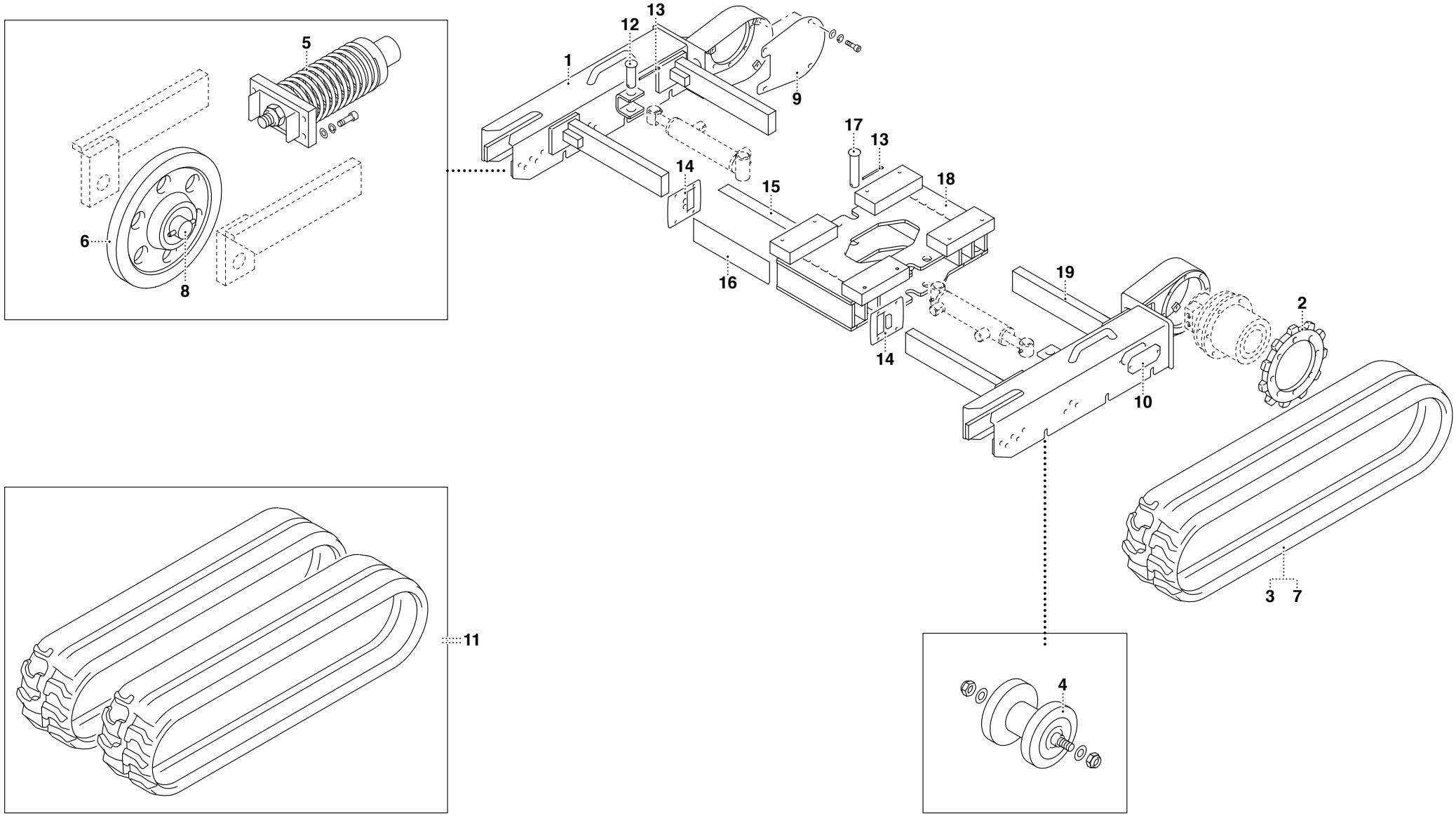

UN07-R-1392-CO

TAV. OA1.02.1.0

POS.	N° CODICE	Q.	DESCRIZIONE	DESIGNATION	BENENNUNG	DESCRIPTION	DENOMINACIONES
1	6.750.203	1	TELAIO	CHASSIS	RAHMEN	FRAME	CHASIS
2	7.680.037	2	CORONA	COURONNE	KRANZ	CROWN	CORONA
3	4.271.027	2	NASTRO “NERO”	RUBAN “NOIR”	BAND “SCHWARZ”	BAND “BLACK”	CINTA “NEGRA”
4	7.670.064	6	RULLO	ROULEAU	ROLLE	ROLLER	RODILLO
5	4.760.016	2	TENDITORE	TENDEUR	SPANNER	TENSIONER	TENSOR
6	7.675.009	2	RUOTA	ROUE	RAD	WHEEL	RUEDA
7	4.271.008	2	NASTRO “BIANCO”	RUBAN “BLANC”	BAND “WEISS”	BAND “WITHE”	CINTA “BLANCA”
8	7.580.729	2	PERNO	AXE	BOLZEN	PIN	PERNO
9	7.300.873	2	COPERCHIO	COUVERCLE	DECKEL	COVER	TAPA
10	7.300.872	2	COPERCHIO	COUVERCLE	DECKEL	COVER	TAPA
11	2.451.052	1	COPPIA NASTRI “NERI”	COPUPLE RUBANS “NOIR”	BÄNDER “SCHWARZ” PAAR	PAIR OF BANDS “BLACK”	PAR DE CINTAS “NEGRA”
12	7.580.731	2	PERNO	AXE	BOLZEN	PIN	PERNO
13	4.305.001	4	COPIGLIA	GOUPILLE	SPLINT	SPLINT PIN	PASADOR
14	6.300.874	4	COPERCHIO	COUVERCLE	DECKEL	COVER	TAPA
15	7.575.536	8	PATTINO	PATIN	GLEITPLATTE	SLIDING BLOCK	PATIN
16	7.575.535	8	PATTINO	PATIN	GLEITPLATTE	SLIDING BLOCK	PATIN
17	7.580.730	1	PERNO	AXE	BOLZEN	PIN	PERNO
18	6.224.004	1	TELAIO	CHASSIS	RAHMEN	FRAME	CHASIS
19	6.750.204	1	TELAIO	CHASSIS	RAHMEN	FRAME	CHASIS

STABILIZZATORI

STABILISATEURS *OUTRIGGERS*
STABILISATOREN *ESTABILIZADORES*

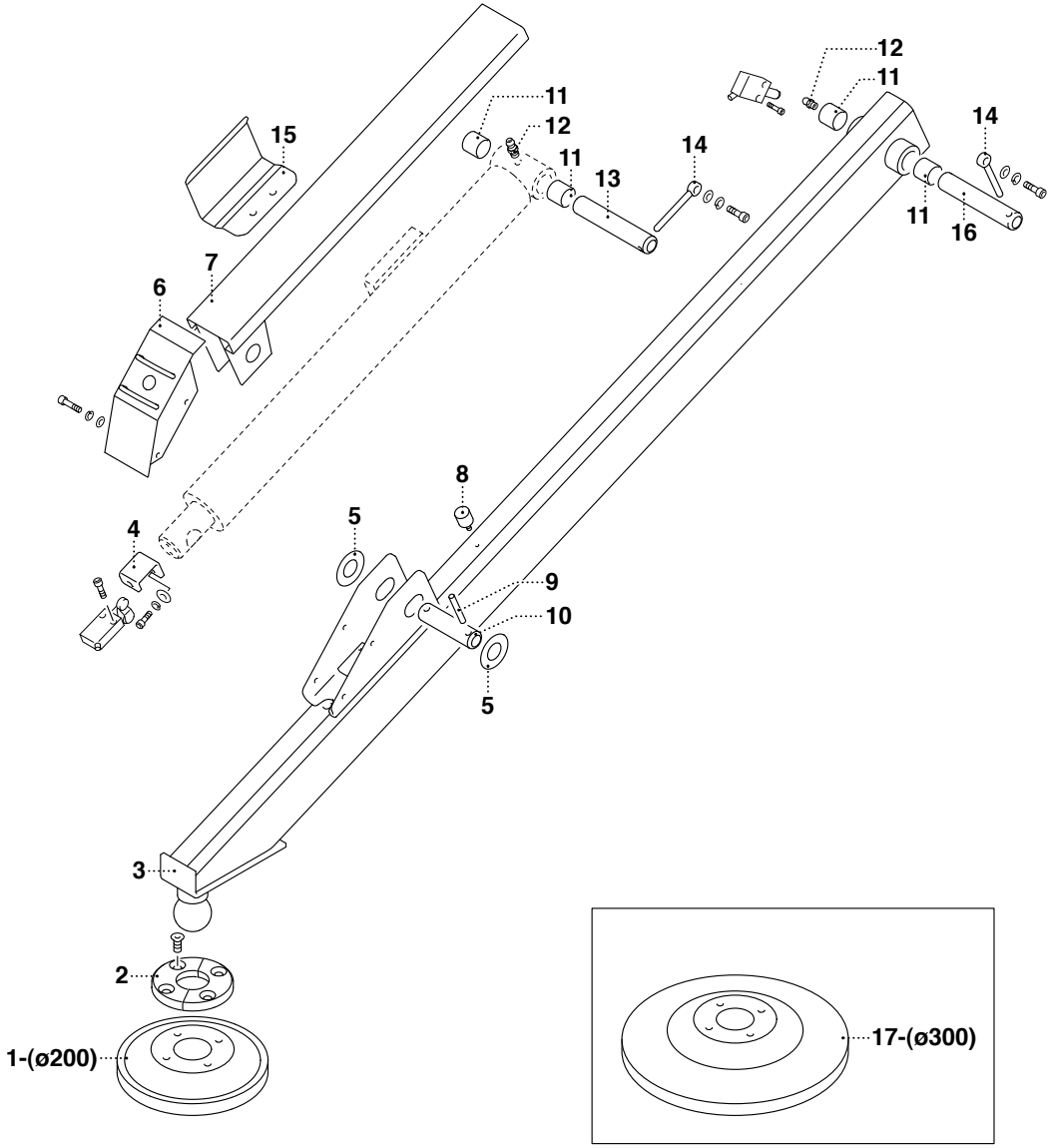

UN07-R-1394-DO

TAV. OA2.01.1.0

POS.	N° CODICE	Q.	DESCRIZIONE	DESIGNATION	BENENNUNG	DESCRIPTION	DENOMINACIONES
1	5.585.013	4	APPOGGIO STANDARD	APPUI STANDARD	STANDARDUNTERLAGE	STANDARD BEARING	PIE ESTANDAR
2	7.190.062	4	BOCCOLA	DOUILLE	BUCHSE	BUSHING	CASQUILLO
3	6.205.322	4	BRACCIO STABILIZZATORE	BRAS STABILISATEUR	STABILISATORARM	STABILISATOR ARM	BRAZO ESTABILIZADOR
4	7.735.312	4	SUPPORTO	SUPPORT	TRÄGER	SUPPORT	SOPORTE
5	4.660.001	8	RONDELLA	RONDELLE	SCHEIBE	WASHER	ARANDELA
6	6.300.007	4	PROTEZIONE	PROTECTION	SCHUTZ	GUARD	PROTECCION
7	6.300.023	4	PROTEZIONE	PROTECTION	SCHUTZ	GUARD	PROTECCION
8	4.125.007	4	ANTIVIBRANTE	PLOT ELASTIQUE	SCHWINGUNGSDAMPFER	PAD	ANTIVIBRANTE
9	4.725.002	4	SPINA	GOUPILLE	STIFT	PIN	PASADOR
10	7.580.695	4	PERNO	AXE	BOLZEN	PIN	PERNO
11	4.195.023	16	BOCCOLA	DOUILLE	BUCHSE	BUSHING	CASQUILLO
12	4.478.001	8	INGRASSATORE	GRAISSEUR	SCHMIERER	GREASE FITTING	ENGRASADOR
13	7.580.696	4	PERNO	AXE	BOLZEN	PIN	PERNO
14	4.725.013	8	FERMO	ARRET	VERSTELLVORRICHTUNG	LOCK	TOPE
15	7.300.791	4	PROTEZIONE	PROTECTION	SCHUTZ	GUARD	PROTECCION
16	7.580.694	4	PERNO	AXE	BOLZEN	PIN	PERNO
17	5.585.017	4	APPOGGIO MAGGIORATO	APPUI MAJORE	ERHÖHTE UNTERLAGE	INCREASED BEARING	PIE AUMENTADO

MOTORE HONDA

MOTEUR HONDA
HONDA MOTOR

HONDA MOTOR
MOTOR HONDA

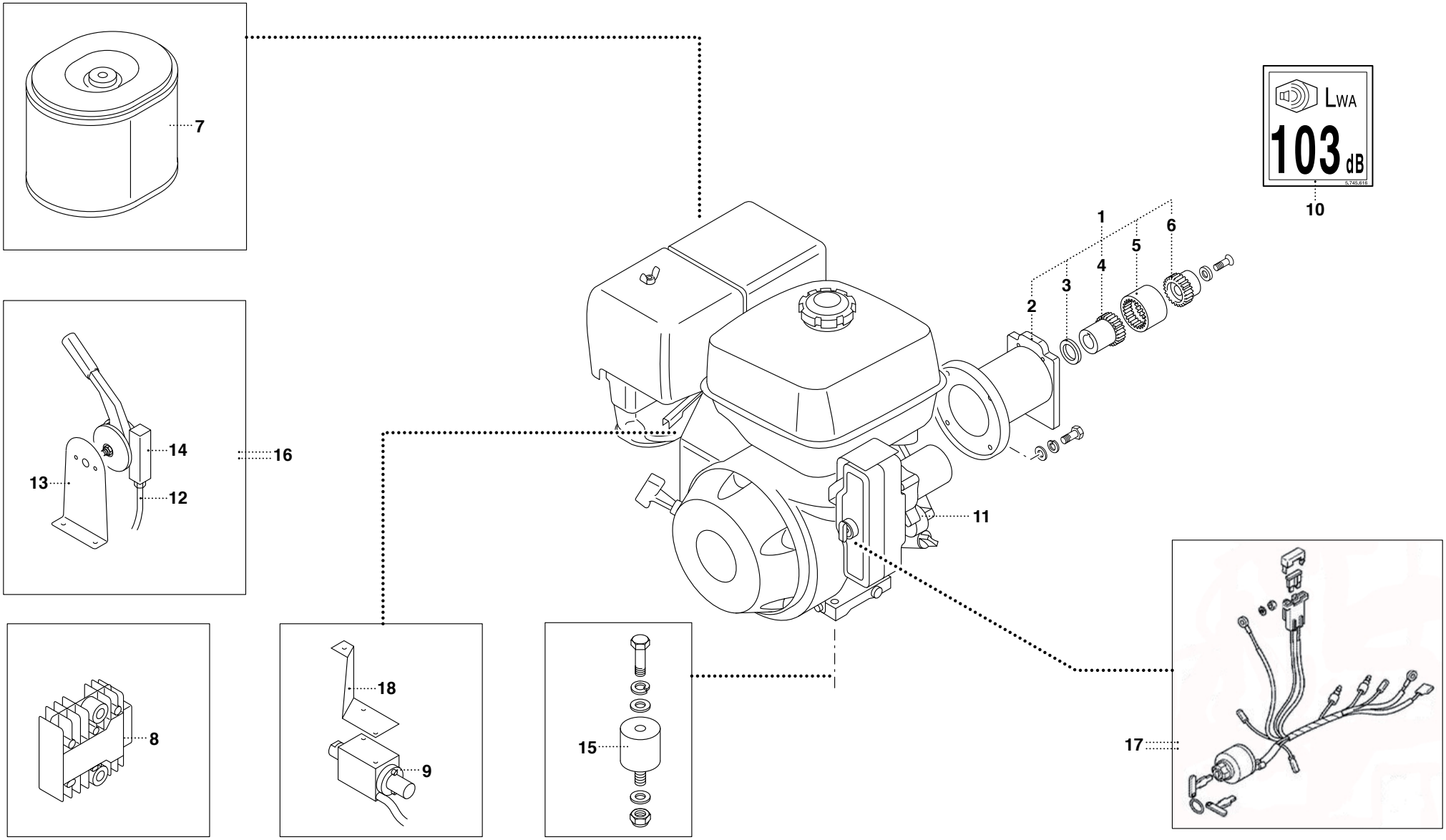

UN07-R-1414-DO

TAV. OA3.01.1.0

POS.	N° CODICE	Q.	DESCRIZIONE	DESIGNATION	BENENNUNG	DESCRIPTION	DENOMINACIONES
1	3.921.978	1	KIT GIUNTO	KIT COUPLER	GELENKSATZ	COUPLING KIT	KIT ACOPLAMIENTO
2	4.390.120	1	LANTERNA	LANTERNE	LATERNE	LANTERN	LINTERNA
3	4.460.343	1	ANELLO	ANNEAU	RING	RING	ANILLO
4	4.435.030	1	GIUNTO	COUPLER	GELENK	COUPLING	ACOPLAMIENTO
5	4.520.018	1	MANICOTTO	MANCHON	MITNEHMER	SLEEVE	MANGUITO
6	4.435.031		GIUNTO	COUPLER	GELENK	COUPLING	ACOPLAMIENTO
7	4.225.020	1	FILTRO	FILTRE	FILTER	FILTER	FILTRO
8	4.682.023	1	ALTERNATORE	ALTERNATEUR	ALTERNATOR	ALTERNATOR	ALTERNADOR
9	4.350.083	1	ELETTROVALVOLA	ELECTROVANNE	ELEKTROVENTIL	ELECTRO VALVE	ELECTRO-VALVULA
10	5.745.617	1	TARGHETTA	AUTOCOLLANT	SCHILD	DECAL	ETIQUETA
11	4.560.041	1	MOTORE (11,7 CV)	MOTEUR (11,7 CV)	MOTOR (11,7 CV)	MOTOR (11,7 CV)	MOTOR (11,7 CV)
12	4.245.562	1	CAVO	CABLE	KABEL	CABLE	CABLE
13	7.498.708	1	SUPPORTO	SUPPORT	TRÄGER	SUPPORT	SOPORTE
14	4.505.013	1	LEVA	LEVIER	HEBEL	LEVER	PALANCA
15	4.125.009	4	ANTIVIBRANTE	PLOT ELASTIQUE	SCHWINGUNGSDAMPFER	PAD	ANTIVIBRANTE
16	3.922.161	1	KIT ACCELERATORE	KIT ACCELERATEUR	BESCHLEUNIGERSATZ	ACCELERATOR KIT	KIT ACELERADOR
17	4.537.545	1	BLOCCO AVVIAMENTO HONDA	BLOC DEMARRAGE HONDA	HONDA-ANLASSSPERRE	HONDA STARTING BLOCK	BLOQUE ARRANQUE HONDA
18	4.488.357	1	SUPPORTO	SUPPORT	TRÄGER	SUPPORT	SOPORTE

MOTORE DIESEL

MOTEUR DIESEL
DIESEL MOTOR

DIESEL MOTOR
MOTOR DIESEL

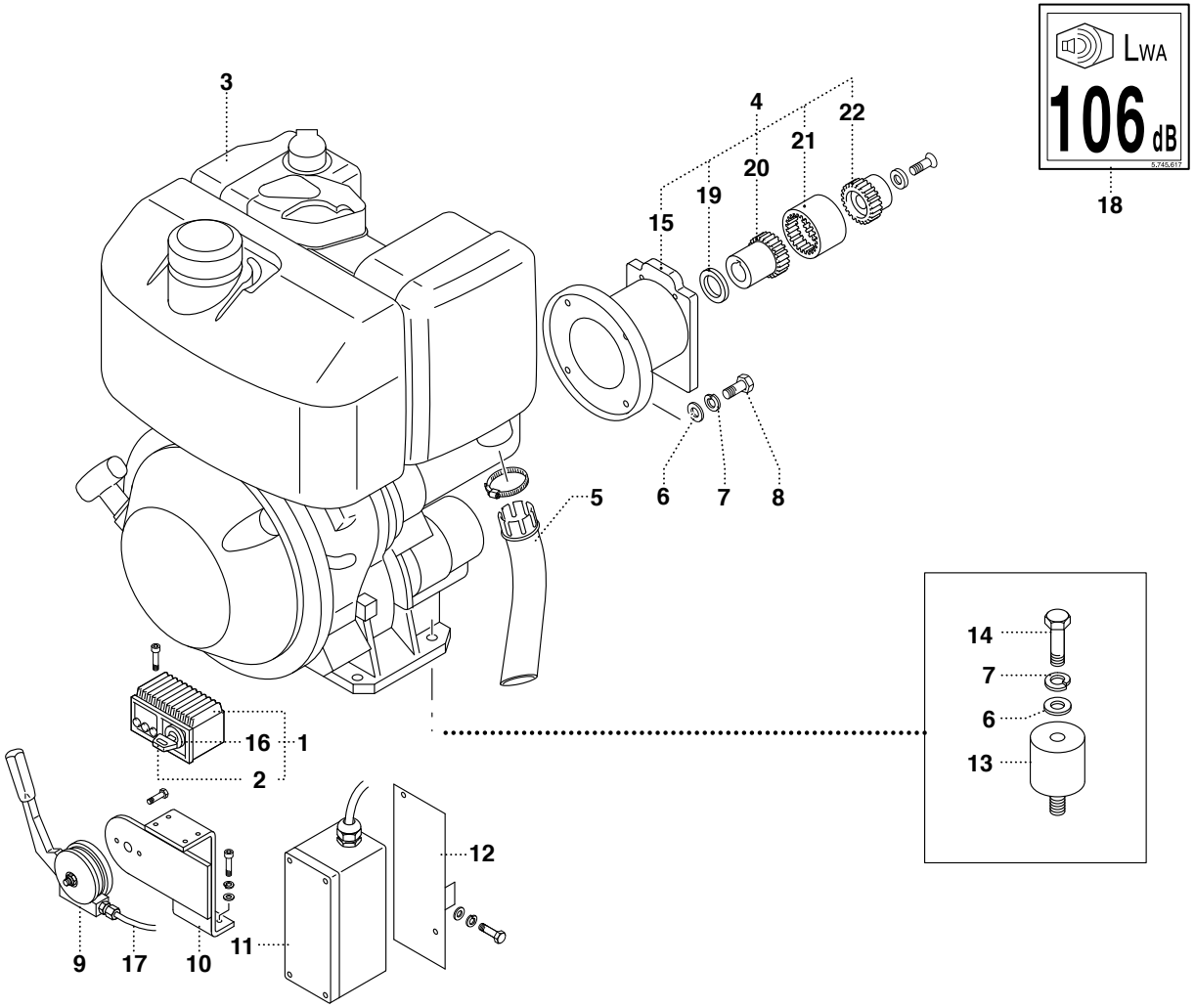

TAV. OA4.01.1.0

POS.	N° CODICE	Q.	DESCRIZIONE	DESIGNATION	BENENNUNG	DESCRIPTION	DENOMINACIONES
1	4.625.070	1	BLOCCO AVVIAMENTO COMPLETO	BLOC DEMARRAGE COMPLET	KOMPLETTANLASSSPERRE	COMPLETE STARTING BLOCK	BLOQUE ARRANQUE COMPLETO
2	4.537.045	1	CHIAVE	CLE	SCHLÜSSEL	KEY	LLAVE
3	4.560.029	1	MOTORE	MOTEUR	MOTOR	MOTOR	MOTOR
4	4.488.978	1	KIT GIUNTO	KIT COUPLER	GELENKSATZ	COUPLING KIT	KIT ACOPLAMIENTO
5	6.700.646	1	TUBO SCARICO	TUYAU DECHARGE	ABLASSROHR	EXHAUST PIPE	TUBO DESCARGA
6	4.660.022	8	RONDELLA	RONDELLE	UNTERLEGSCHEIBE	WASHER	ARANDELA
7	4.660.026	8	RONDELLA	RONDELLE	UNTERLEGSCHEIBE	WASHER	ARANDELA
8	4.805.515	4	VITE	VIS	SCHRAUBE	SCREW	TORNILLO
9	4.505.013	1	LEVA	LEVIER	HEBEL	LEVER	PALANCA
10	6.735.259	1	SUPPORTO	SUPPORT	TRÄGER	SUPPORT	SOPORTE
11	4.625.039	1	SCATOLA	BOITE	GEHÄUSE	BOX	CAJA
12	6.735.293	1	SUPPORTO	SUPPORT	TRÄGER	SUPPORT	SOPORTE
13	4.125.045	4	ANTIVIBRANTE	PLOT ELASTIQUE	SCHWINGUNGSDAMPFER	PAD	ANTIVIBRANTE
14	4.805.249	4	VITE	VIS	SCHRAUBE	SCREW	TORNILLO
15	4.390.120	4	VITE	VIS	SCHRAUBE	SCREW	TORNILLO
16	4.537.591	1	BLOCCO	BLOC	SPERRE	BLOCK	BLOQUE
17	4.245.047	1	CAVO	CABLE	KABEL	CABLE	CABLE
18	5.745.616	1	TARGHETTA	AUTOCOLLANT	SCHILD	DECAL	ETIQUETA
19	4.460.343	1	ANELLO	ANNEAU	RING	RING	ANILLO
20	4.435.030	1	GIUNTO	COUPLER	GELENK	COUPLING	ACOPLAMIENTO
21	4.520.018	1	MANICOTTO	MANCHON	MITNEHMER	SLEEVE	MANGUITO
22	4.435.031	1	GIUNTO	COUPLER	GELENK	COUPLING	ACOPLAMIENTO

OIL&STEEL

GRUPPO BATTERIE

GROUPE BATTERIES
BATTERIENGRUPPE

BATTERIES GROUP
GRUPO BATERIAS

TAV. OA5.01.1.0

octopus 14

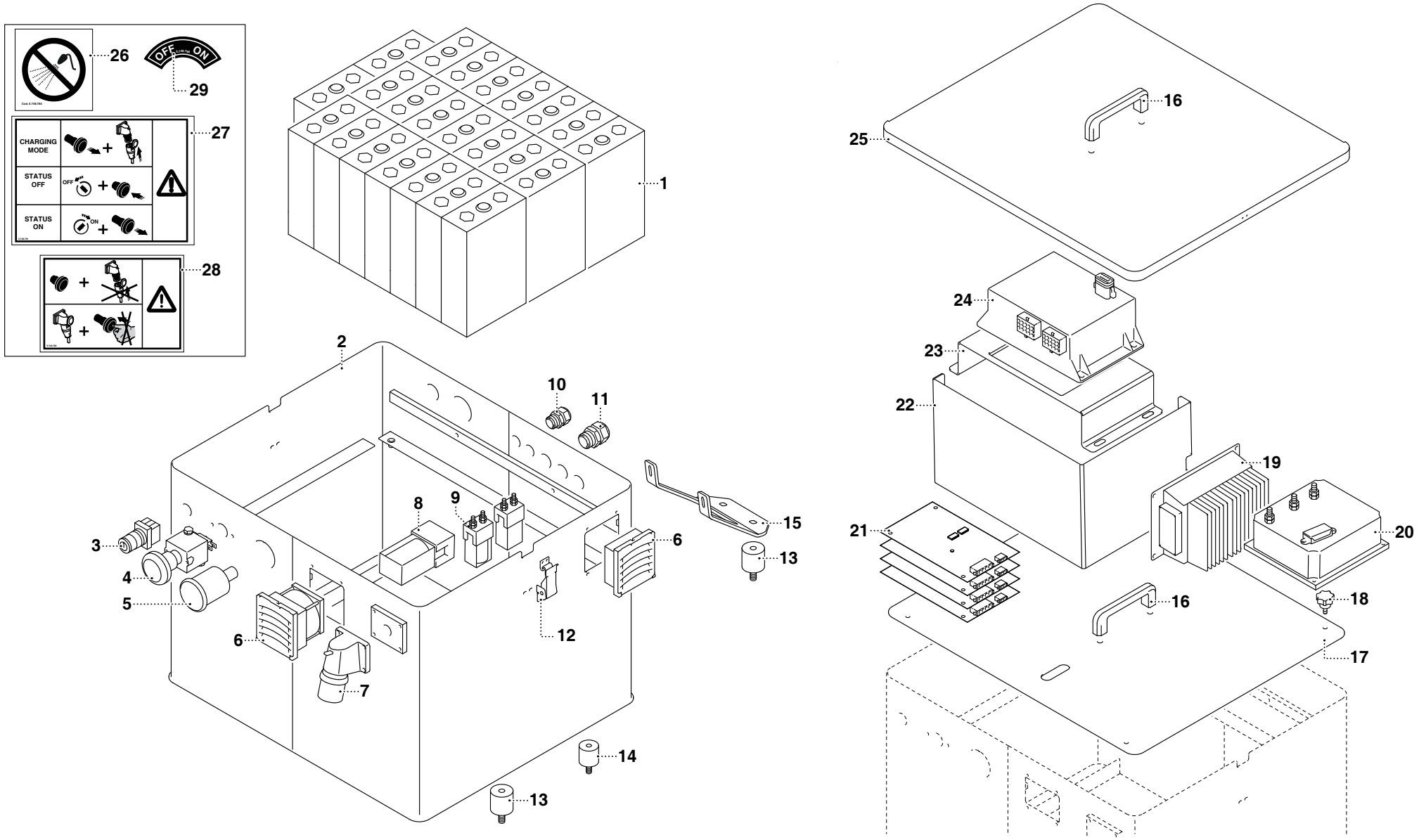

OS-R-A0592-ED

TAV. OA5.01.1.0

POS.	N° CODICE	Q.	DESCRIZIONE	DESIGNATION	BENENNUNG	DESCRIPTION	DENOMINACIONES
1	4.170.055	1	BATTERIA	BATTERIE	BATTERIE	BATTERY	BATERIA
2	6.230.116	1	CARTER	CARTER	GEHÄUSE	CASING	CARTER
3	4.537.318	1	SELETTORE	SELECTEUR	WAHLSCHALTER	SELECTOR	SELECTOR 7.770.015
4	4.537.554	1	PULSANTE	BOUTON	DRUCKKNOPF	PUSH BUTTON	PULSADOR
5	4.682.344	1	DISPLAY	DISPLAY	DISPLAY	DISPLAY	DISPLAY
6	4.510.299	1	KIT VENTOLA	VENTILATEUR	LUFTERRAD	FAN	VENTILADOR
7	4.537.207	1	PRESA ELETTRICA	PRISE DE COURANT	STECKDOSE	OUTLET	ENCHUFE
8	4.537.676	1	TELERUTTORE	TELERUPTEUR	FERNSCHALTER	REMOTE CONTROL	TELEINTERRUPTOR
9	4.537.672	2	TELERUTTORE	TELERUPTEUR	FERNSCHALTER	REMOTE CONTROL	TELEINTERRUPTOR
10	4.534.156	2	PRESSACAVO	PRESSECABLE	KABELDRUCK	CABLEPRESS	PRENSACABLE
11	4.534.121	4	PRESSACAVO	PRESSECABLE	KABELDRUCK	CABLEPRESS	PRENSACABLE
12	4.255.026	2	CHIUSURA	FERMETURE	VERSCHLUSS	LOCK	CIERRE
13	4.125.028	4	ANTIVIBRANTE	PLOT ELASTIQUE	SCHWINGUNGSDAMPFER	PAD	ANTIVIBRANTE
14	4.125.071	2	ANTIVIBRANTE	PLOT ELASTIQUE	SCHWINGUNGSDAMPFER	PAD	ANTIVIBRANTE
15	7.770.022	1	SUPPORTO	SUPPORT	TRÄGER	SUPPORT	SOPORTE
16	4.525.009	2	MANIGLIA	POIGNEE	GRIFF	HANDLE	MANIJA
17	6.301.246	1	COPERCHIO	COUVERCLE	DECKEL	COVER	TAPA
18	4.605.013	4	POMELLO	POMMEAU	KNOPF	KNOB	POMO
19	4.682.457	1	CONVERTITORE DC/DC	CONVERTISSEUR DC/DC	KONVERTER DC/DC	CONVERTER DC/DC	CONVERTIDOR DC/DC
20	4.682.338	1	INVERTITORE	INVERSEUR	WENDER	INVERTER	INVERSOR
21	4.682.456	1	UNITA’ CONTR. BMS	UNITE CONTROLE BMS	KONTROLLEINHEIT BMS	BMS CONTROL UNIT	UNIDAD CONTROL BMS
22	6.301.245	1	LAMIERA	TOLE	BLECH	PLATE	LAMINA
23	7.736.684	1	SUPPORTO	SUPPORT	TRÄGER	SUPPORT	SOPORTE
24	4.170.054	1	CARICABATTERIA	CHARGEUR BATTERIE	BATTERIELADEGERÄT	BATTERY CHARGER	CARGADOR BATERIA
25	6.301.247	1	COPERCHIO	COUVERCLE	DECKEL	COVER	TAPA

OIL&STEEL

GRUPPO BATTERIE

GROUPE BATTERIES
BATTERIENGRUPPE

BATTERIES GROUP
GRUPO BATERIAS

TAV. OA5.01.1.0

octopus 14

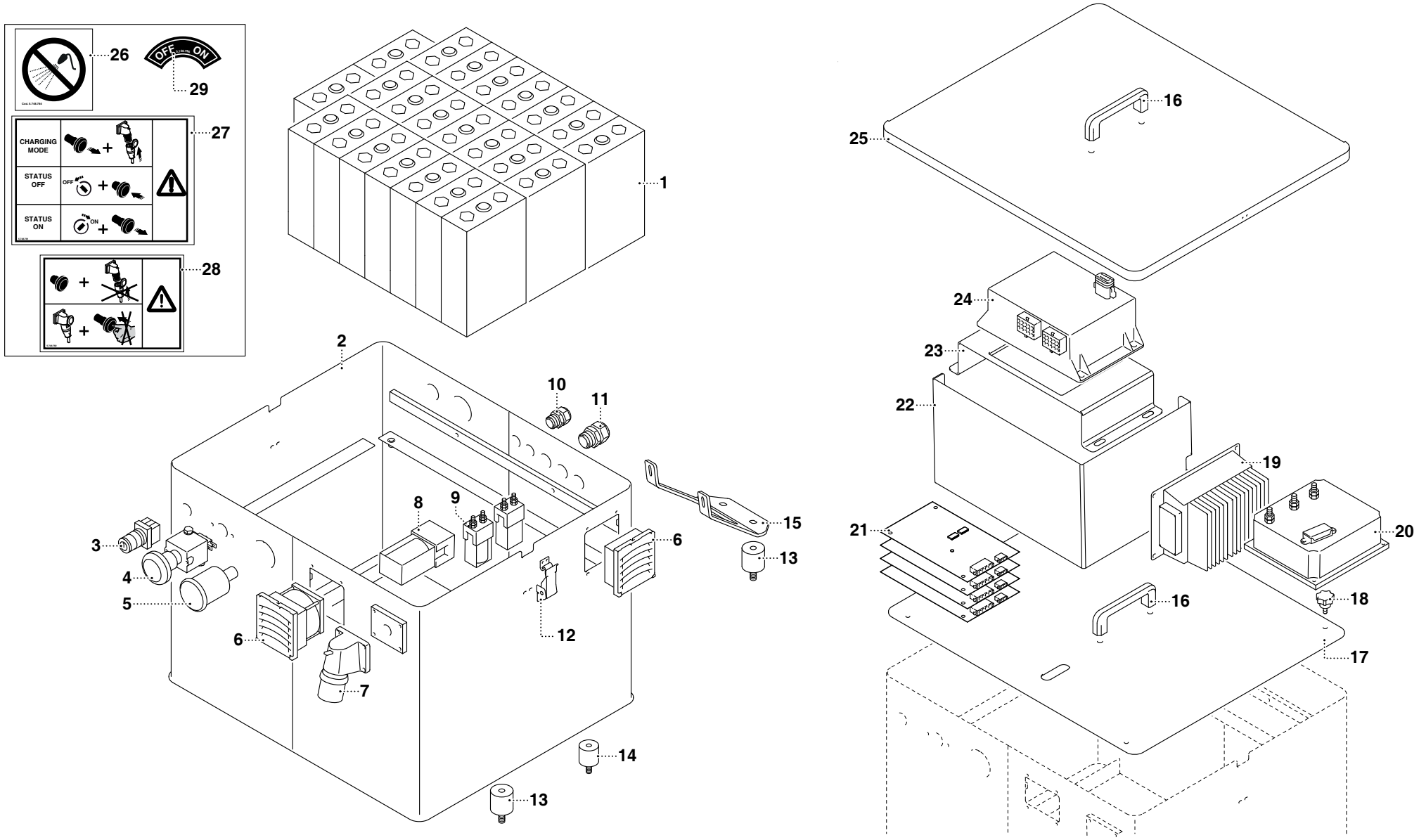

OS-R-A0592-ED

POS.	N° CODICE	Q.	DESCRIZIONE	DESIGNATION	BENENNUNG	DESCRIPTION	DENOMINACIONES
26	5.748.784	4	TARGHETTA	DECALCOMANIE	ABZIEHBILD	DECAL	CALCOMANIA
27	5.748.791	1	TARGHETTA	DECALCOMANIE	ABZIEHBILD	DECAL	CALCOMANIA
28	5.748.792	1	TARGHETTA	DECALCOMANIE	ABZIEHBILD	DECAL	CALCOMANIA
29	5.748.796	1	TARGHETTA	DECALCOMANIE	ABZIEHBILD	DECAL	CALCOMANIA

SERBATOIO OLIO

RESERVOIR D'HUILE
ÖLBEHÄLTER
OIL TANK
DEPOSITO ACEITE

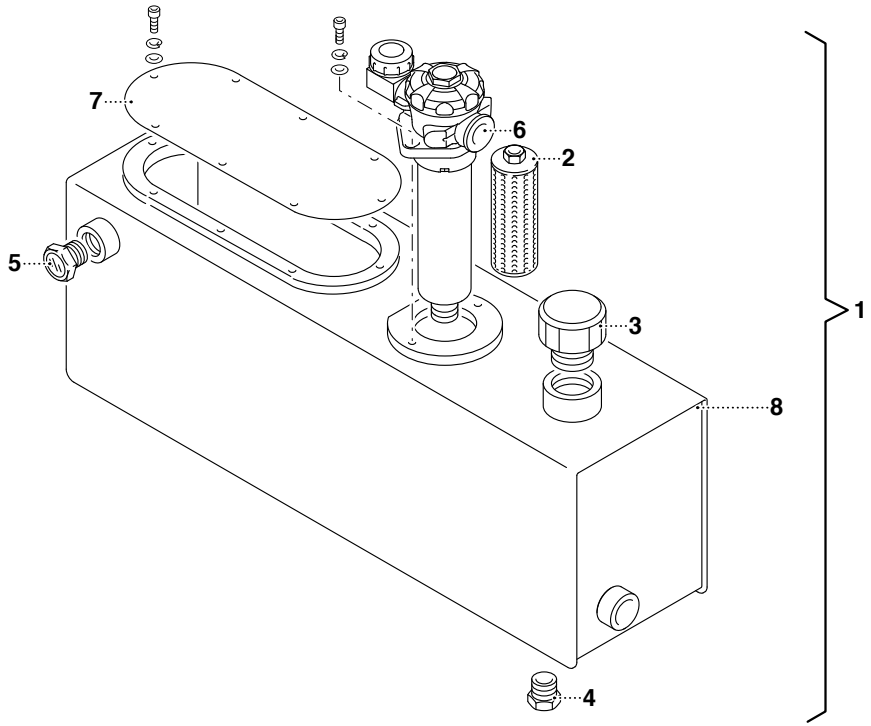

TAV. OA6.01.1.0

POS.	N° CODICE	Q.	DESCRIZIONE	DESIGNATION	BENENNUNG	DESCRIPTION	DENOMINACIONES
1	3.921.969	1	KIT SERBATOIO	KIT RESERVOIR	TANKSATZ	TANK KIT	KIT DEPOSITO
2	4.225.102	1	CARTUCCIA FILTRANTE	CARTOUCHE FILTRANTE	FILTEREINSATZ	FILTERING CARTRIDGE	CARTUCHO FILTRANTE
3	4.741.045	1	TAPPO	BOUCHON	VERSCHLUSSDECKEL	PLUG	TAPON
4	4.630.770	1	TAPPO	BOUCHON	VERSCHLUSSDECKEL	PLUG	TAPON
5	4.200.001	1	INDICATORE DI LIVELLO	INDICATEUR DE NIVEAU	PEGELZEIGER	LEVEL INDICATOR	INDICADOR DE NIVEL
6	4.380.079	1	FILTRO	FILTRE	FILTER	FILTER	FILTRO
7	7.300.911	1	COPERCHIO	COUVERCLE	DECKEL	COVER	TAPA
8	6.710.073	1	SERBATOIO	RESERVOIR	TANK	TANK	DEPOSITO

TORRETTA

TOURELLE
TURM

TURRET
TORRE

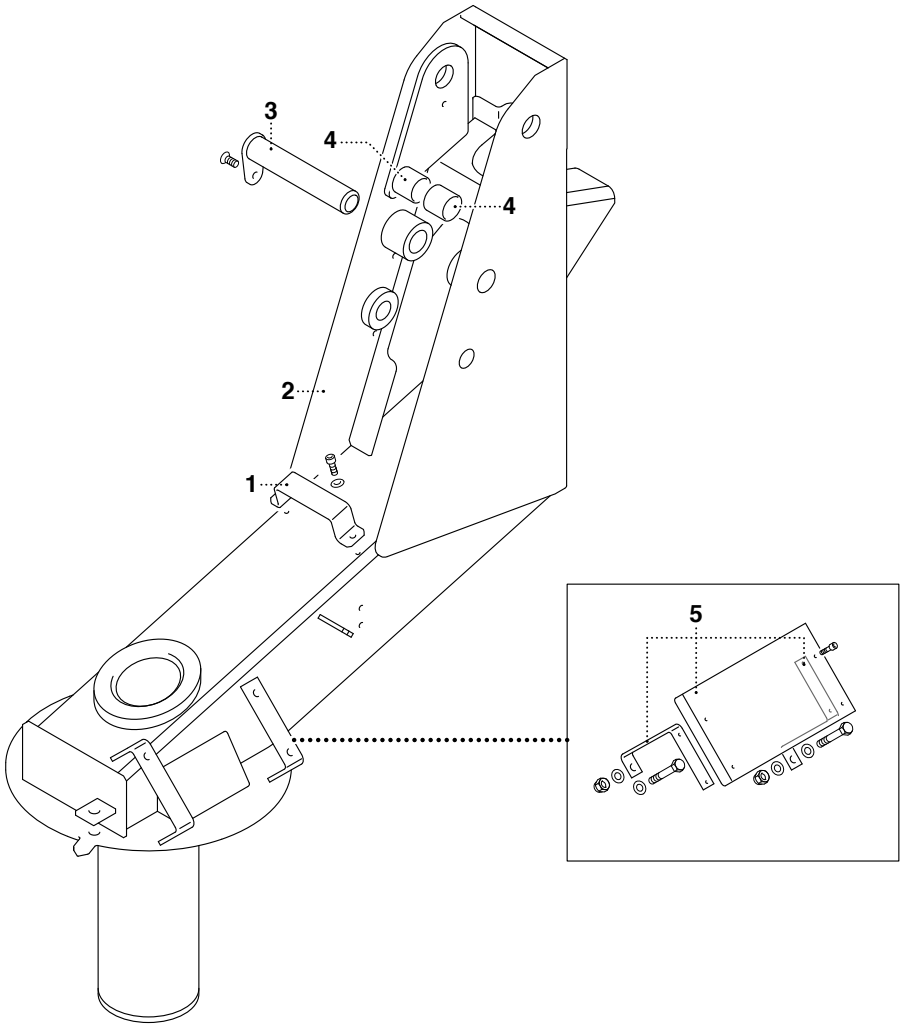

TAV. OB1.01.1.0

POS.	N° CODICE	Q.	DESCRIZIONE	DESIGNATION	BENENNUNG	DESCRIPTION	DENOMINACIONES
1	7.685.896	1	FERMO	ARRET	VERSTELLVORRICHTUNG	LOCK	TOPE
2	6.290.052	1	COLONNA	COLONNE	SÄULE	COLUMN	COLUMNA
3	7.580.275	1	PERNO	AXE	BOLZEN	PIN	PERNO
4	4.195.004	2	BOCCOLA	DOUILLE	BUCHSE	BUSHING	CASQUILLO
5	6.735.163	1	PROTEZIONE	PROTECTION	SCHUTZ	GUARD	PROTECCION

ROTAZIONE TORRETTA

ROTATION TOURELLE
TURMROTATION

TURRET ROTATION
ROTACION TORRE

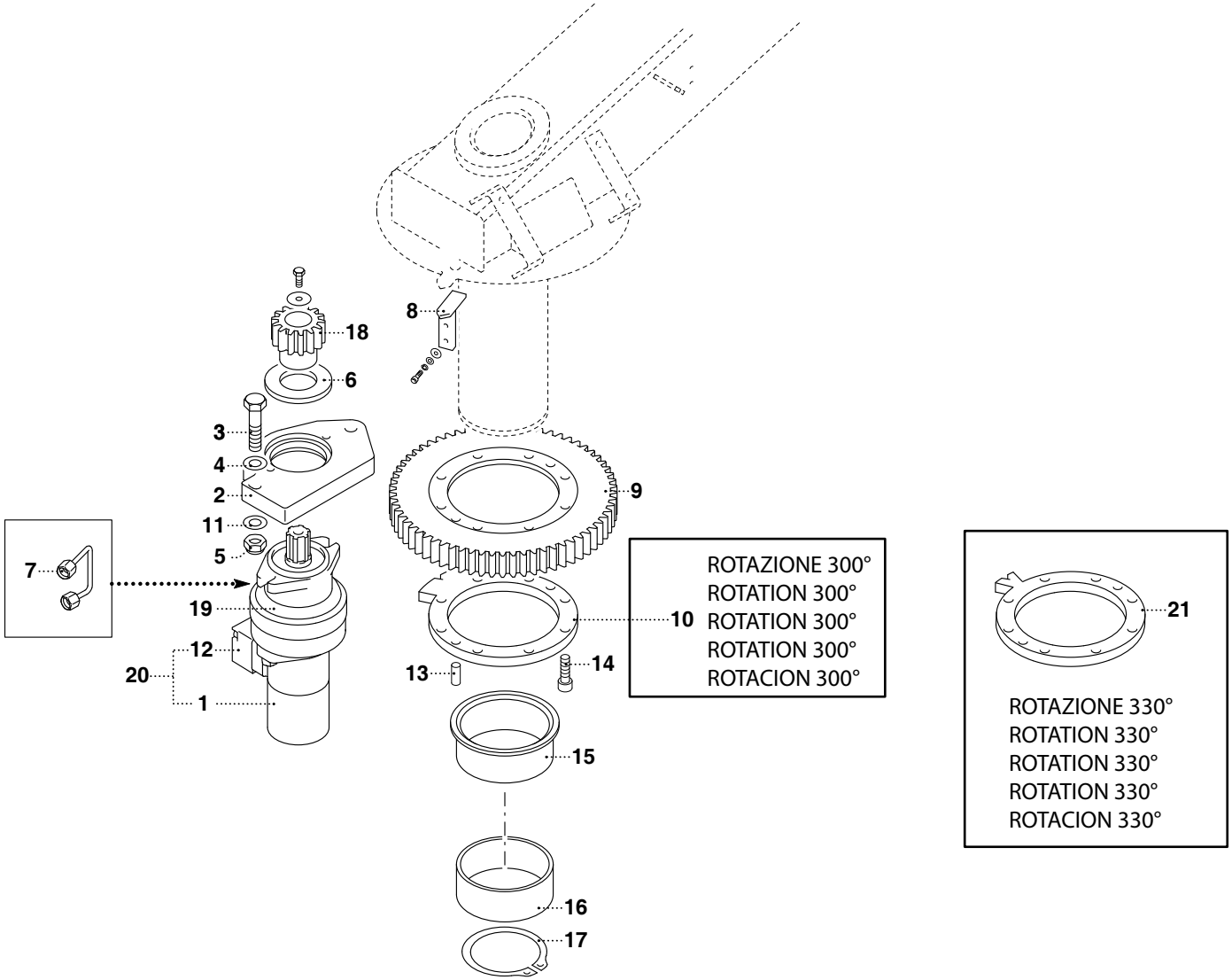

TAV. OC1.01.1.0

POS.	N° CODICE	Q.	DESCRIZIONE	DESIGNATION	BENENNUNG	DESCRIPTION	DENOMINACIONES
1	4.555.034	1	MOTORE	MOTEUR	MOTOR	MOTOR	MOTOR
2	7.490.869	1	FLANGIA	BRIDE	FLANSCH	FLANGE	BRIDA
3	4.805.034	2	VITE	VIS	SCHRAUBE	SCREW	TORNILLO
4	4.660.027	2	RONDELLA	RONDELLE	SCHEIBE	WASHER	ARANDELA
5	4.320.005	2	DADO	ECROU	MUTTER	NUT	TUERCA
6	4.460.034	1	GUARNIZIONE	JOINT	DICHTUNG	SEAL	JUNTA
7	5.782.360	1	TUBO RIGIDO	TUYAU RIGIDE	ROHR	PIPE	TUBO RIGIDO
8	6.735.676	1	SUPPORTO	SUPPORT	TRÄGER	SUPPORT	SOPORTE
9	7.680.003	1	RUOTA DENTATA	ROUE A PIGNON	ZAHNRAD	GEAR WHEEL	RUEDA DENTADA
10	7.510.072	1	FERMO	ARRET	VERSTELLVORRICHTUNG	LOCK	TOPE
11	4.660.028	2	RONDELLA	RONDELLE	SCHEIBE	WASHER	ARANDELA
12	4.790.209	1	VALVOLA	SOUPAPE	VENTIL	VALVE	VALVULA
13	4.725.004	1	SPINA	GOUPILLE	STIFT	PIN	PASADOR
14	4.805.216	4	VITE	VIS	SCHRAUBE	SCREW	TORNILLO
15	7.190.061	1	BOCCOLA	DOUILLE	BUCHSE	BUSHING	CASQUILLO
16	7.190.056	1	BOCCOLA	DOUILLE	BUCHSE	BUSHING	CASQUILLO
17	4.120.011	1	ANELLO ELASTICO	JOINT D’ARRET	SPRENGRING	SPRING RING	ANILLO ELASTICO
18	5.595.004	1	PIGNONE	PIGNON	RITZEL	PIGNION	PINON
19	4.405.002	1	FRENO	FREIN	BREMSE	BRAKE	FRENO
20	4.555.026	1	MOTORE COMPLETO	MOTEUR COMPLET	KOMPLETTMOTOR	COMPLETE MOTOR	MOTOR COMPLETO
21	7.510.296	1	FERMO	ARRET	VERSTELLVORRICHTUNG	LOCK	TOPE

BRACCIO ARTICOLATO

BRAS ARTICULE
AUSLEGARM

ARTICULED BOOMS SECTION
BRAZO ARTICULADO

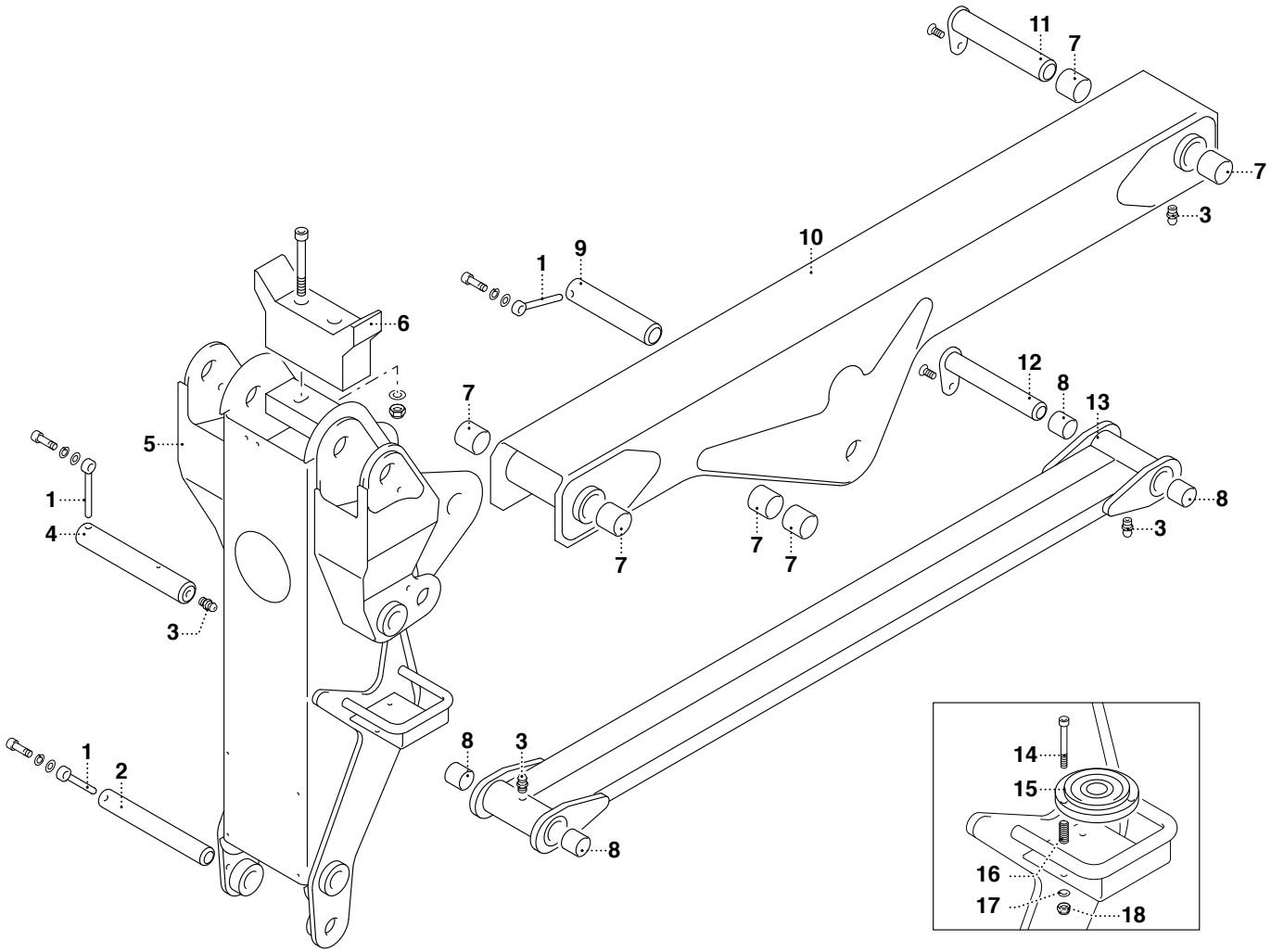

TAV. OD1.01.1.0

POS.	N° CODICE	Q.	DESCRIZIONE	DESIGNATION	BENENNUNG	DESCRIPTION	DENOMINACIONES
1	7.725.003	3	FERMO	ARRET	VERSTELLVORRICHTUNG	LOCK	TOPE
2	7.580.278	1	PERNO	AXE	BOLZEN	PIN	PERNO
3	4.478.001	1	INGRASSATORE	GRAISSEUR	SCHMIERER	GREASE FITTING	ENGRASADOR
4	7.580.279	1	PERNO	AXE	BOLZEN	PIN	PERNO
5	6.650.041	1	TESTATA	TETE	KOPF	HEAD	CABEZA
6	7.575.502	1	PATTINO	PATIN	GLEITBLOCK	SLIDING BLOCK	PATIN
7	4.195.004	4	BOCCOLA	DOUILLE	BUCHSE	BUSHING	CASQUILLO
8	4.195.023	4	BOCCOLA	DOUILLE	BUCHSE	BUSHING	CASQUILLO
9	7.580.705	1	PERNO	AXE	BOLZEN	PIN	PERNO
10	6.160.031	1	BARRA	BARRE	STANGE	BAR	BARRA
11	7.580.275	1	PERNO	AXE	BOLZEN	PIN	PERNO
12	7.580.276	1	PERNO	AXE	BOLZEN	PIN	PERNO
13	6.160.032	1	BARRA	BARRE	STANGE	BAR	BARRA
14	4.805.126	3	VITE	VIS	SCHRAUBE	SCREW	TORNILLO
15	4.200.010	1	LIVELLA A BOLLA	NIVEAU A BULLE	WASSERWAAGE	SPIRIT LEVEL	NIVEL DE AIRE
16	4.545.095	3	MOLLA	RESSORT	FEDER	SPRING	MUELLE
17	4.660.022	3	RONDELLA	RONDELLE	SCHEIBE	WASHER	ARANDELA
18	4.320.021	3	DADO	ECROU	MUTTER	NUT	TUERCA

OIL&STEEL

BRACCIO ARTICOLATO

BRAS ARTICULE
AUSLEGARM

ARTICULED BOOMS SECTION
BRAZO ARTICULADO

TAV. OD1.02.1.0

octopus 14

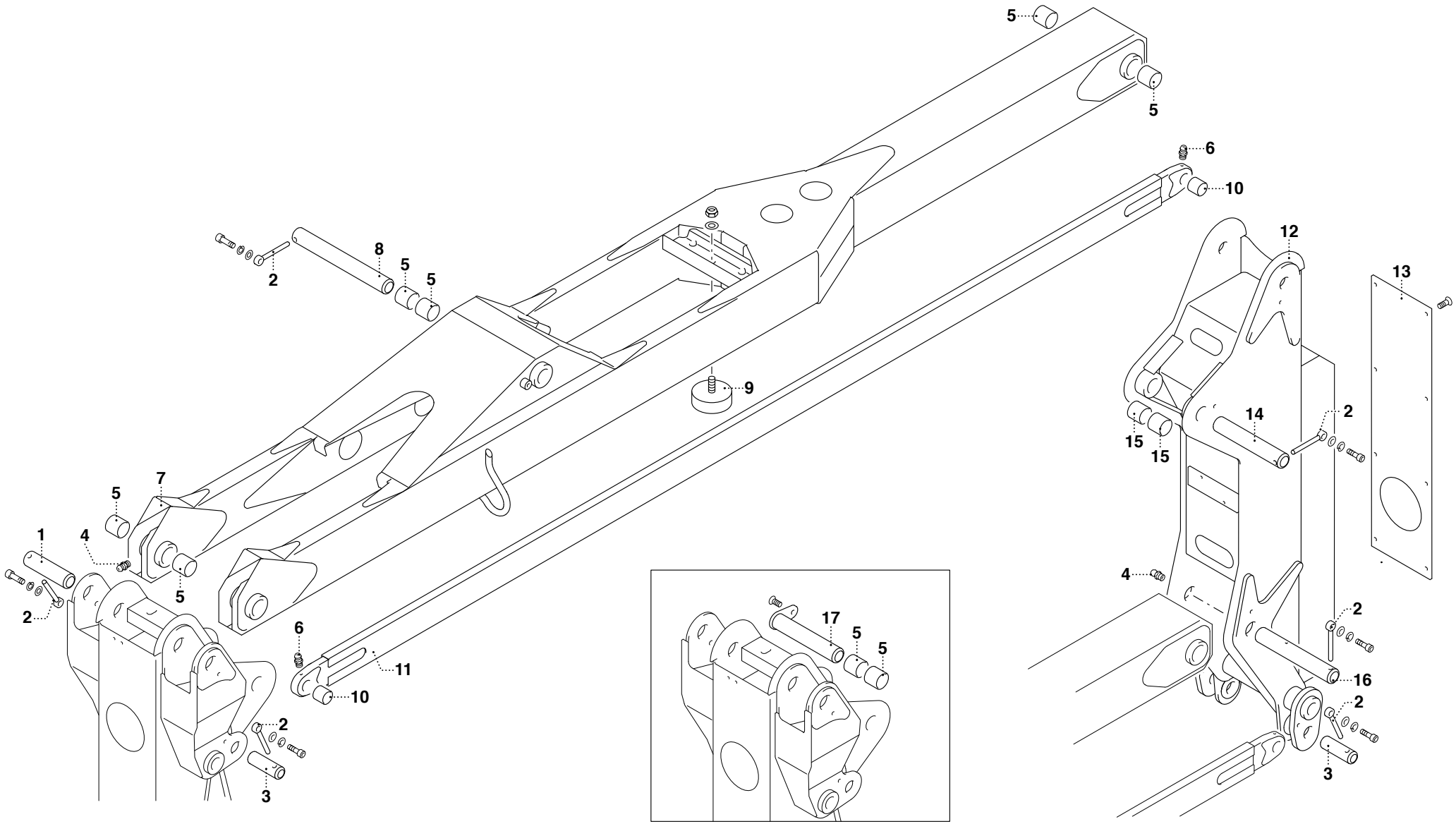

UN07-R-0689-DI

TAV. OD1.02.1.0

POS.	N° CODICE	Q.	DESCRIZIONE	DESIGNATION	BENENNUNG	DESCRIPTION	DENOMINACIONES
1	7.580.280	2	PERNO	AXE	BOLZEN	PIN	PERNO
2	7.725.003	5	FERMO	ARRET	VERSTELLVORRICHTUNG	LOCK	TOPE
3	7.580.714	2	PERNO	AXE	BOLZEN	PIN	PERNO
4	4.478.001	3	INGRASSATORE	GRAISSEUR	SCHMIERER	GREASE FITTING	ENGRASADOR
5	4.195.004	8	BOCCOLA	DOUILLE	BUCHSE	BUSHING	CASQUILLO
6	4.478.002	4	INGRASSATORE	GRAISSEUR	SCHMIERER	GREASE FITTING	ENGRASADOR
7	6.160.080	1	BARRA	BARRE	STANGE	BAR	BARRA
8	7.580.281	1	PERNO	AXE	BOLZEN	PIN	PERNO
9	4.125.008	1	ANTIVIBRANTE	PLOT ELASTIQUE	SCHWINGUNGSDAMPFER	PAD	ANTIVIBRANTE
10	4.195.023	2	BOCCOLA	DOUILLE	BUCHSE	BUSHING	CASQUILLO
11	6.160.079	2	BARRA	BARRE	STANGE	BAR	BARRA
12	6.650.042	1	TESTATA	TETE	KOPF	HEAD	CABEZA
13	5.575.070	1	PATTINO	PATIN	GLEITBLOCK	SLIDING BLOCK	PATIN
14	7.580.706	1	PERNO	AXE	BOLZEN	PIN	PERNO
15	4.195.004	2	BOCCOLA	DOUILLE	BUCHSE	BUSHING	CASQUILLO
16	7.580.551	1	PERNO	AXE	BOLZEN	PIN	PERNO
17	7.580.275	1	PERNO	AXE	BOLZEN	PIN	PERNO

OIL&STEEL

1° BRACCIO

PREMIER BRAS — *FIRST BOOM*

ERSTE AUSLEGER — *PRIMER BRAZO*

TAV. OE1.01.1.0

octopus 14

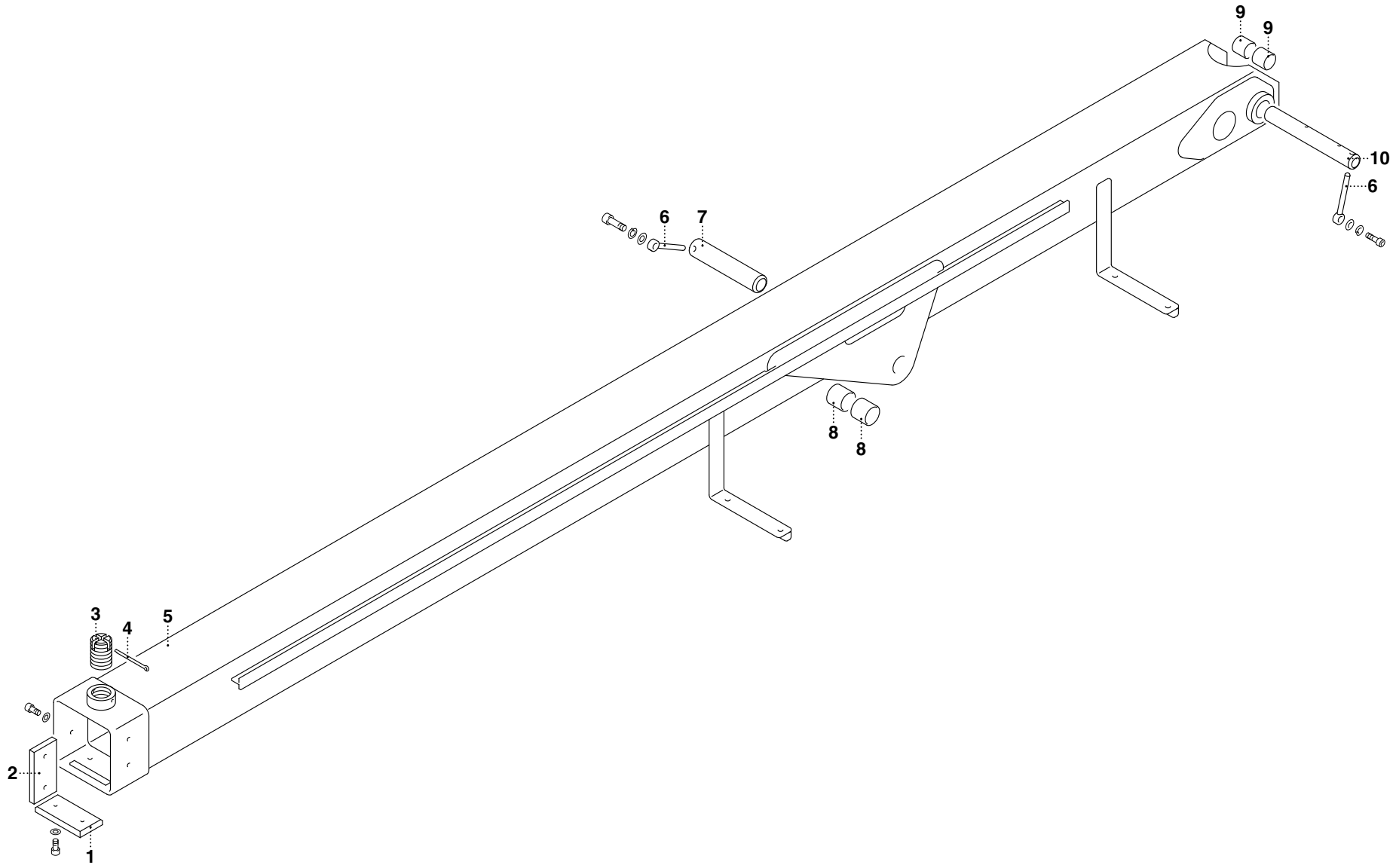

UN07-R-0691-IG

TAV. OE1.01.1.0

POS.	N° CODICE	Q.	DESCRIZIONE	DESIGNATION	BENENNUNG	DESCRIPTION	DENOMINACIONES
1	5.575.075	1	PATTINO	PATIN	GLEITBLOCK	SLIDING BLOCK	PATIN
2	6.575.497	2	PATTINO	PATIN	GLEITBLOCK	SLIDING BLOCK	PATIN
3	5.575.004	1	PATTINO	PATIN	GLEITBLOCK	SLIDING BLOCK	PATIN
4	4.305.008	1	COPIGLIA	GOUPILLE	SPLINT	SPLIT PIN	PASADOR
5	6.205.260	1	BRACCIO	BRAS	ARM	ARM	BRAZO
6	7.725.003	2	FERMO	ARRET	VERSTELLVORRICHTUNG	LOCK	TOPE
7	7.580.131	1	PERNO	AXE	BOLZEN	PIN	PERNO
8	4.195.004	2	BOCCOLA	DOUILLE	BUCHSE	BUSHING	CASQUILLO
9	4.195.023	2	BOCCOLA	DOUILLE	BUCHSE	BUSHING	CASQUILLO
10	7.580.707	1	PERNO	AXE	BOLZEN	PIN	PERNO

OIL&STEEL

2° BRACCIO

DEUXIEME BRAS — *SECOND BOOM*

ZWEITE AUSLEGER — *SEGUNDO BRAZO*

TAV. OE2.01.1.0

octopus 14

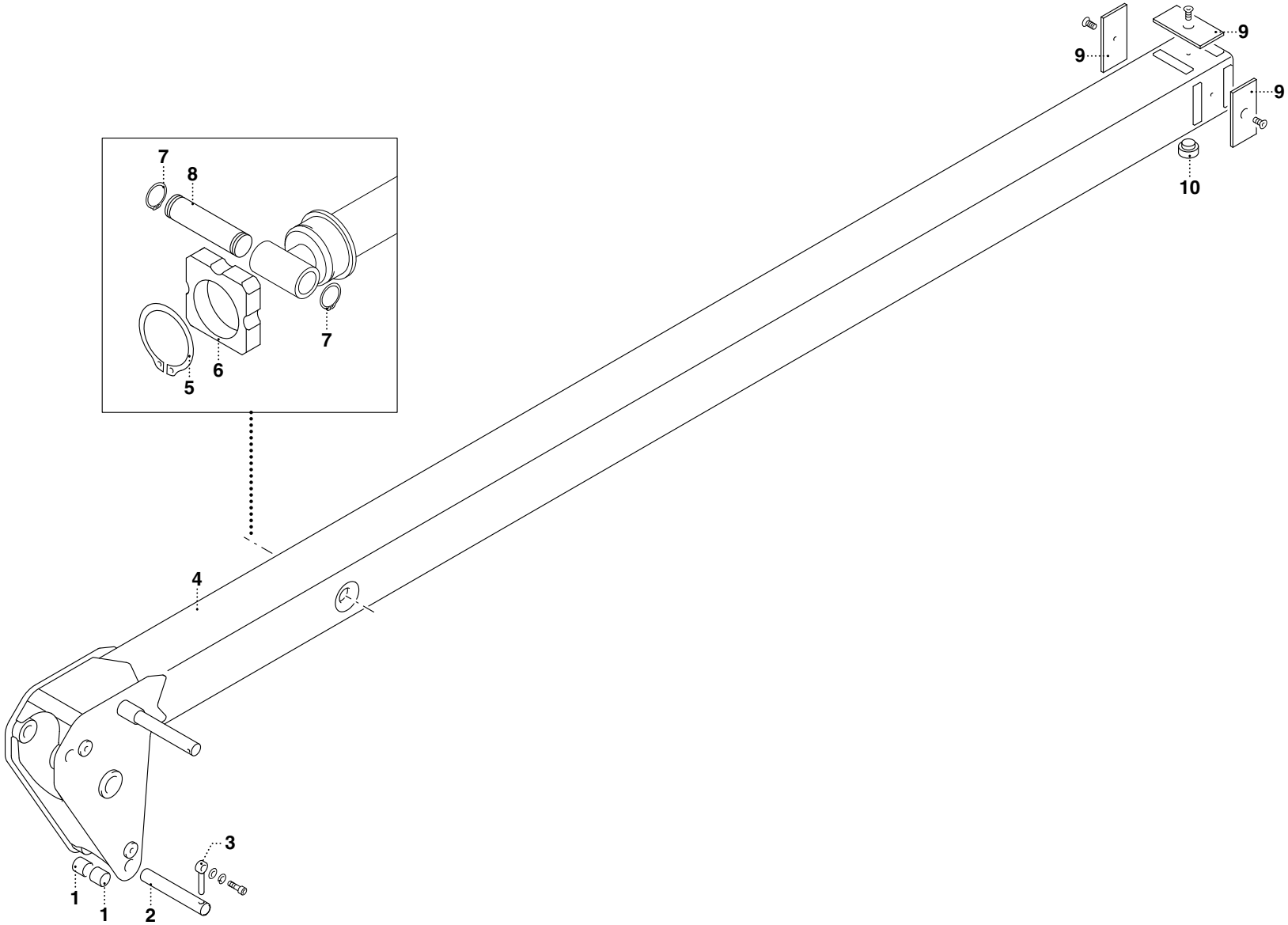

UN07-R-0692-IG

TAV. OE2.01.1.0

POS.	N° CODICE	Q.	DESCRIZIONE	DESIGNATION	BENENNUNG	DESCRIPTION	DENOMINACIONES
1	4.195.039	2	BOCCOLA	DOUILLE	BUCHSE	BUSHING	CASQUILLO
2	7.580.697	1	PERNO	AXE	BOLZEN	PIN	PERNO
3	7.725.013	1	FERMO	ARRET	VERSTELLVORRICHTUNG	LOCK	TOPE
4	6.205.261	1	BRACCIO	BRAS	ARM	ARM	BRAZO
5	4.120.003	1	ANELLO ELASTICO	JOINT D'ARRET	SPRENGRING	SPRING RING	ANILLO ELASTICO
6	7.575.496	1	PATTINO	PATIN	GLEITBLOCK	SLIDING BLOCK	PATIN
7	4.120.002	2	ANELLO	BAGUE	RING	RING	ANILLO
8	7.580.711	1	PERNO	AXE	BOLZEN	PIN	PERNO
9	7.575.498	3	PATTINO	PATIN	GLEITBLOCK	SLIDING BLOCK	PATIN
10	5.575.006	1	PATTINO	PATIN	GLEITBLOCK	SLIDING BLOCK	PATIN

OIL&STEEL

CANALETTA PORTA-TUBI

CANALISATION PORTE TUBES — *HOLDER-HOSES EACEWAY*

SCHLAUCHHALTER - KANAL — *CANALIZACION PORTA-TUBOS*

TAV. OF1.01.1.0

octopus 14

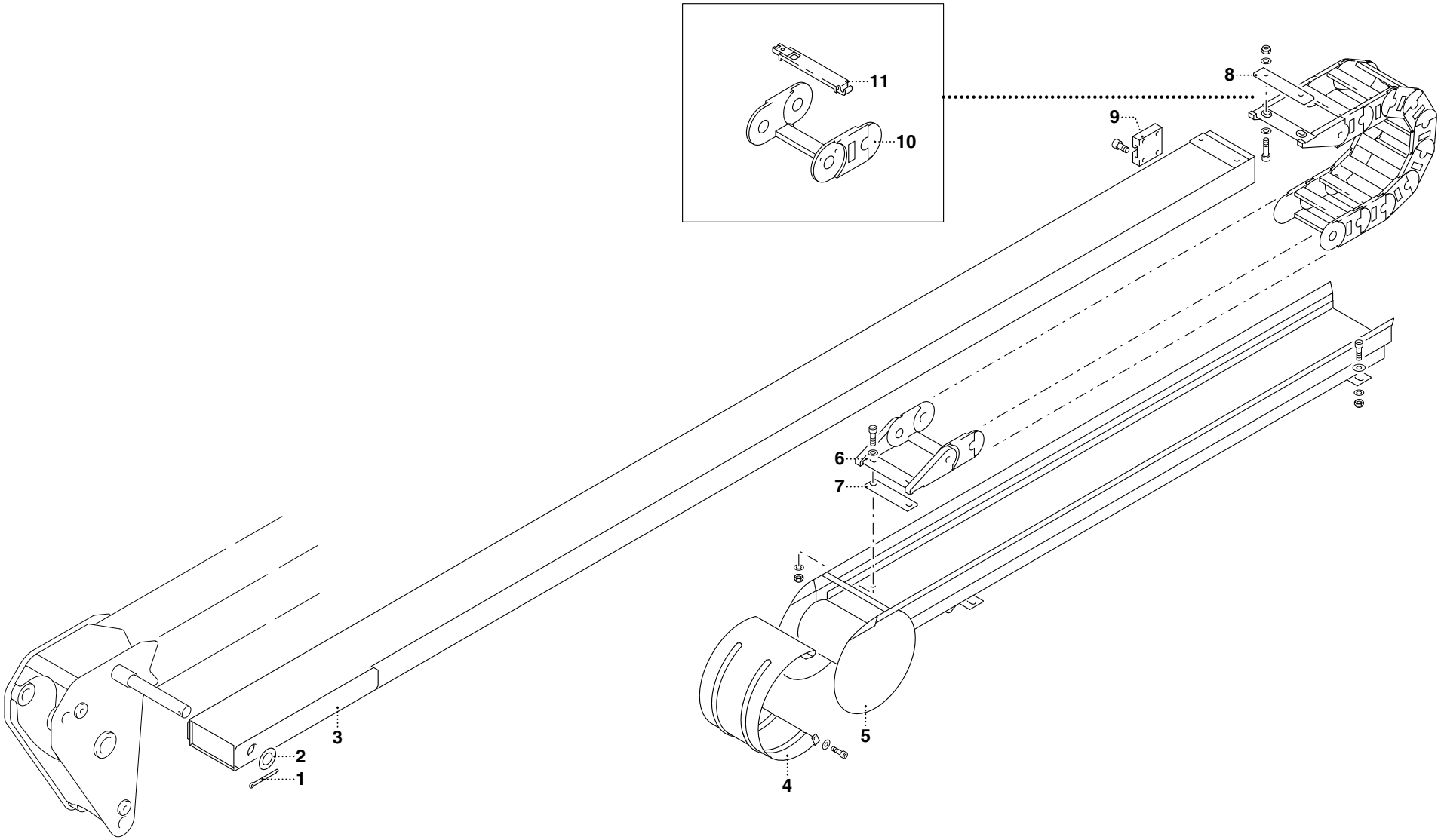

UN07-R-0693-IG

TAV. OF1.01.1.0

POS.	N° CODICE	Q.	DESCRIZIONE	DESIGNATION	BENENNUNG	DESCRIPTION	DENOMINACIONES
1	4.305.013	1	COPIGLIA	GOUPILLE	SPLINT	SPLIT PIN	PASADOR
2	4.660.024	4	RONDELLA	RONDELLE	SCHEIBE	WASHER	ARANDELA
3	6.215.115	1	CANALETTA	CANALISATION	KANAL	RACEWAY	CANALIZACION
4	6.300.081	1	PROTEZIONE	PROTECTION	SCHUTZ	GUARD	PROTECCION
5	6.215.114	1	CANALETTA	CANALISATION	KANAL	RACEWAY	CANALIZACION
6	4.240.046	1	CATENA	CHAINE	KETTE	CHAIN	CADENA
7	7.498.626	1	PIATTO	PLAQUE	PLATTE	DISC	PLACA
8	7.685.717	1	PIATTO	PLAQUE	PLATTE	DISC	PLACA
9	7.575.458	1	PATTINO	PATIN	GLEITBLOCK	SLIDING BLOCK	PATIN
10	4.240.033		GIUNTO CATENA	COUPLER CHAINE	KETTEGELENK	CHAIN COUPLING	ACOPLAM. CADENA
11	4.240.030		FERMO	ARRET	VERSTELLVORRICHTUNG	LOCK	TOPE

OIL&STEEL

GRUPPO "JIB"

GROUPE "JIB"
"JIB"-GRUPPE
"JIB"-GROUP
GRUPO "JIB"

TAV. OG1.01.1.0

octopus 14

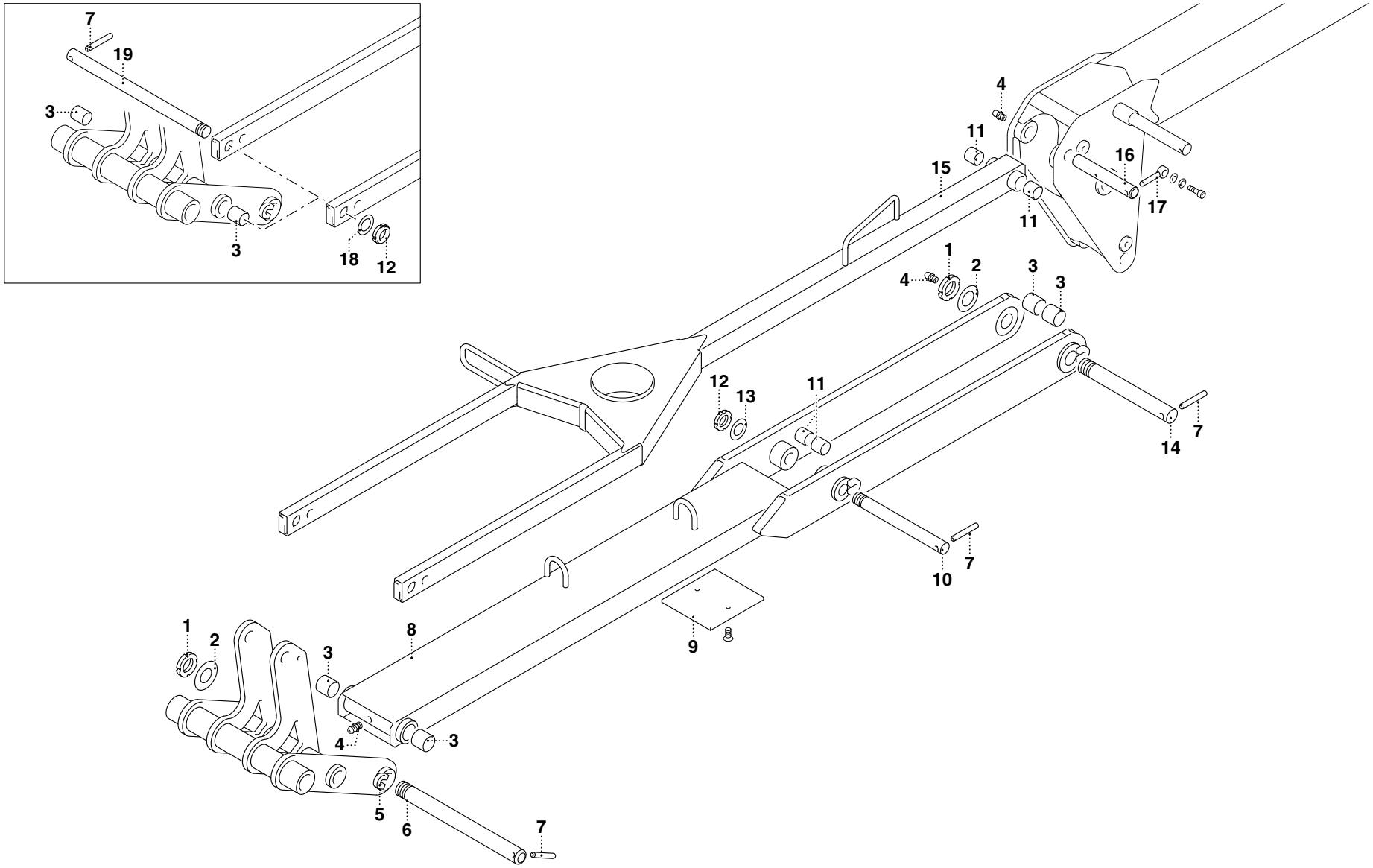

UN07-R-0694-IG

TAV. OG1.01.1.0

POS.	N° CODICE	Q.	DESCRIZIONE	DESIGNATION	BENENNUNG	DESCRIPTION	DENOMINACIONES
1	4.430.002	2	GHIERA	FRETTE	NUTMUTTER	RING NUT	TUERCA
2	4.660.001	2	RONDELLA	RONDELLE	SCHEIBE	WASHER	ARANDELA
3	4.195.023	6	BOCCOLA	DOUILLE	BUCHSE	BUSHING	CASQUILLO
4	4.478.001	3	INGRASSATORE	GRAISSEUR	SCHMIERER	GREASE FITTING	ENGRASADOR
5	6.715.042	1	SNODO	ARTICULATION	GELENK	ARTICULATION	ARTICULACION
6	7.580.712	1	PERNO	AXE	BOLZEN	PIN	PERNO
7	4.725.002	4	SPINA	GOUPILLE	STIFT	PIN	PASADOR
8	6.160.076	1	BARRA	BARRE	STANGE	BAR	BARRA
9	7.575.502	1	PATTINO	PATIN	GLEITBLOCK	SLIDING BLOCK	PATIN
10	7.580.709	1	PERNO	AXE	BOLZEN	PIN	PERNO
11	4.195.039	4	BOCCOLA	DOUILLE	BUCHSE	BUSHING	CASQUILLO
12	4.430.001	2	GHIERA	FRETTE	NUTMUTTER	RING NUT	TUERCA
13	4.660.024	1	RONDELLA	RONDELLE	SCHEIBE	WASHER	ARANDELA
14	7.580.708	1	PERNO	AXE	BOLZEN	PIN	PERNO
15	6.160.075	1	BARRA	BARRE	STANGE	BAR	BARRA
16	7.580.699	1	PERNO	AXE	BOLZEN	PIN	PERNO
17	7.725.013	1	FERMO	ARRET	VERSTELLVORRICHTUNG	LOCK	TOPE
18	4.660.024	1	RONDELLA	RONDELLE	SCHEIBE	WASHER	ARANDELA
19	7.580.713	1	PERNO	AXE	BOLZEN	PIN	PERNO

OIL&STEEL

SUPPORTO PIATTAFORMA DI LAVORO

SUPPORT PLATE-FORME DE TRAVAIL *WORK PLATFORM SUPPORT*

ARBEITSPLATTFORMHALTER *SOPORTE PLATAFORMA DE TRABAJO*

TAV. OI1.01.1.0

octopus 14

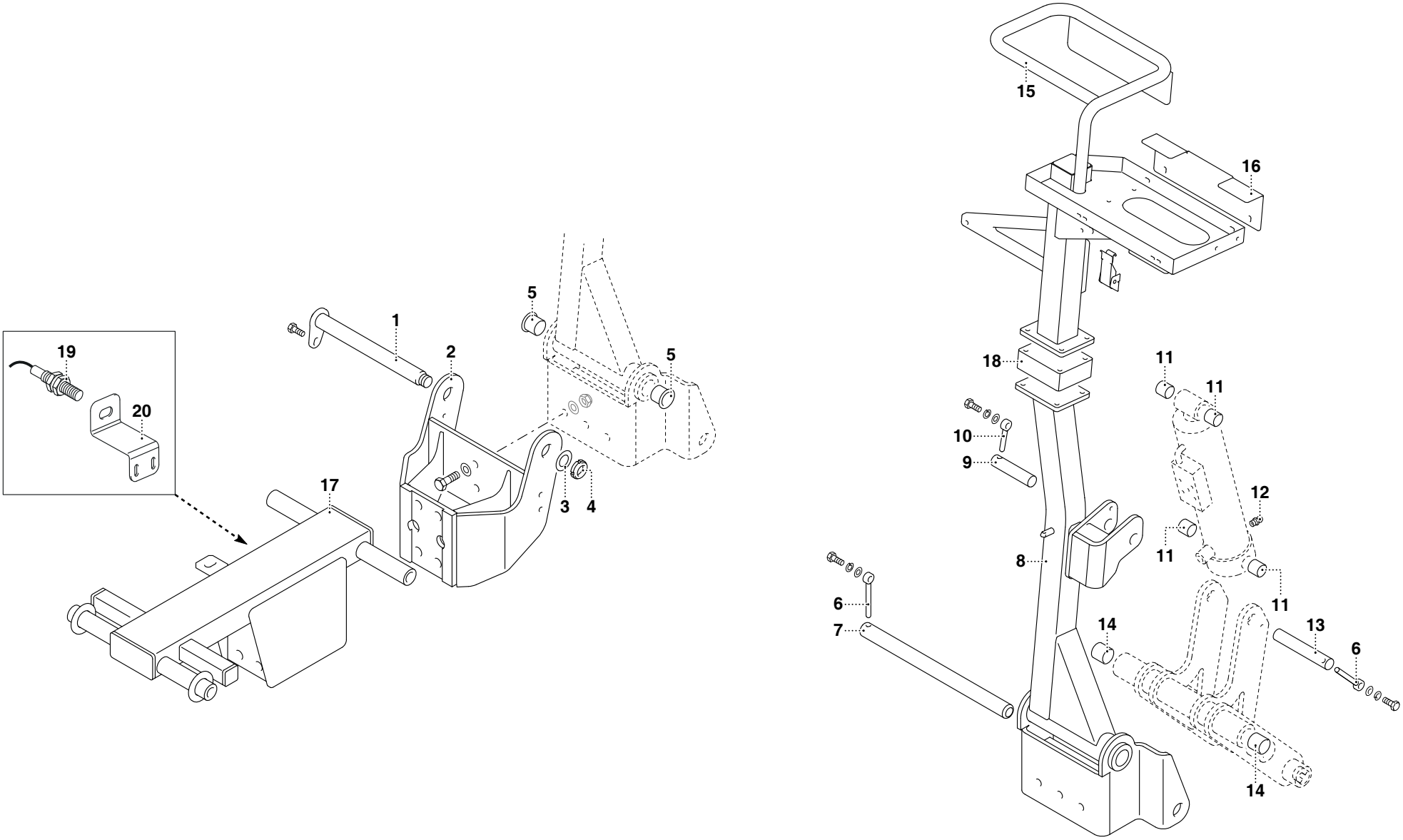

OS-R-A0594-ED

TAV. OI1.01.1.0

POS.	N° CODICE	Q.	DESCRIZIONE	DESIGNATION	BENENNUNG	DESCRIPTION	DENOMINACIONES
1	6.580.701	1	PERNO	AXE	BOLZEN	PIN	PERNO
2	6.735.797	1	SUPPORTO	SUPPORT	TRÄGER	SUPPORT	SOPORTE
3	4.660.024	1	RONDELLA	RONDELLE	SCHEIBE	WASHER	ARANDELA
4	4.430.002	1	GHIERA	FRETTE	NUTMUTTER	RING NUT	TUERCA
5	5.195.098	2	BOCCOLA	DOUILLE	BUCHSE	BUSHING	CASQUILLO
6	4.725.003	2	FERMO	ARRET	VERSTELLVORRICHTUNG	LOCK	TOPE
7	6.580.139	1	PERNO	AXE	BOLZEN	PIN	PERNO
8	6.736.168	1	SUPPORTO	SUPPORT	TRÄGER	SUPPORT	SOPORTE
9	6.580.137	1	PERNO	AXE	BOLZEN	PIN	PERNO
10	7.725.013	1	FERMO	ARRET	VERSTELLVORRICHTUNG	LOCK	TOPE
11	4.195.039	4	BOCCOLA	DOUILLE	BUCHSE	BUSHING	CASQUILLO
12	4.478.011	1	INGRASSATORE	GRAISSEUR	SCHMIERER	GREASE FITTING	ENGRASADOR
13	7.580.710	1	PERNO	AXE	BOLZEN	PIN	PERNO
14	5.195.023	2	BOCCOLA	DOUILLE	BUCHSE	BUSHING	CASQUILLO
15	6.736.169	1	SUPPORTO	SUPPORT	TRÄGER	SUPPORT	SOPORTE
16	6.736.284	1	SUPPORTO	SUPPORT	TRÄGER	SUPPORT	SOPORTE
17	6.735.798	1	SUPPORTO	SUPPORT	TRÄGER	SUPPORT	SOPORTE
18	7.575.641	1	PATTINO	PATIN	GLEITBLOCK	SLIDING BLOCK	PATIN
19	4.540.013	1	SENSORE	CAPTEUR	SENSOR	SENSOR	SENSOR
20	7.736.606	1	SUPPORTO	SUPPORT	TRÄGER	SUPPORT	SOPORTE

OIL&STEEL

PIATTAFORMA DI LAVORO

PLATE-FORME DE TRAVAIL — *WORK PLATFORM*

ARBEITSPLATTFORM — *PLATAFORMA DE TRABAJO*

TAV. OI2.01.1.0

octopus 14

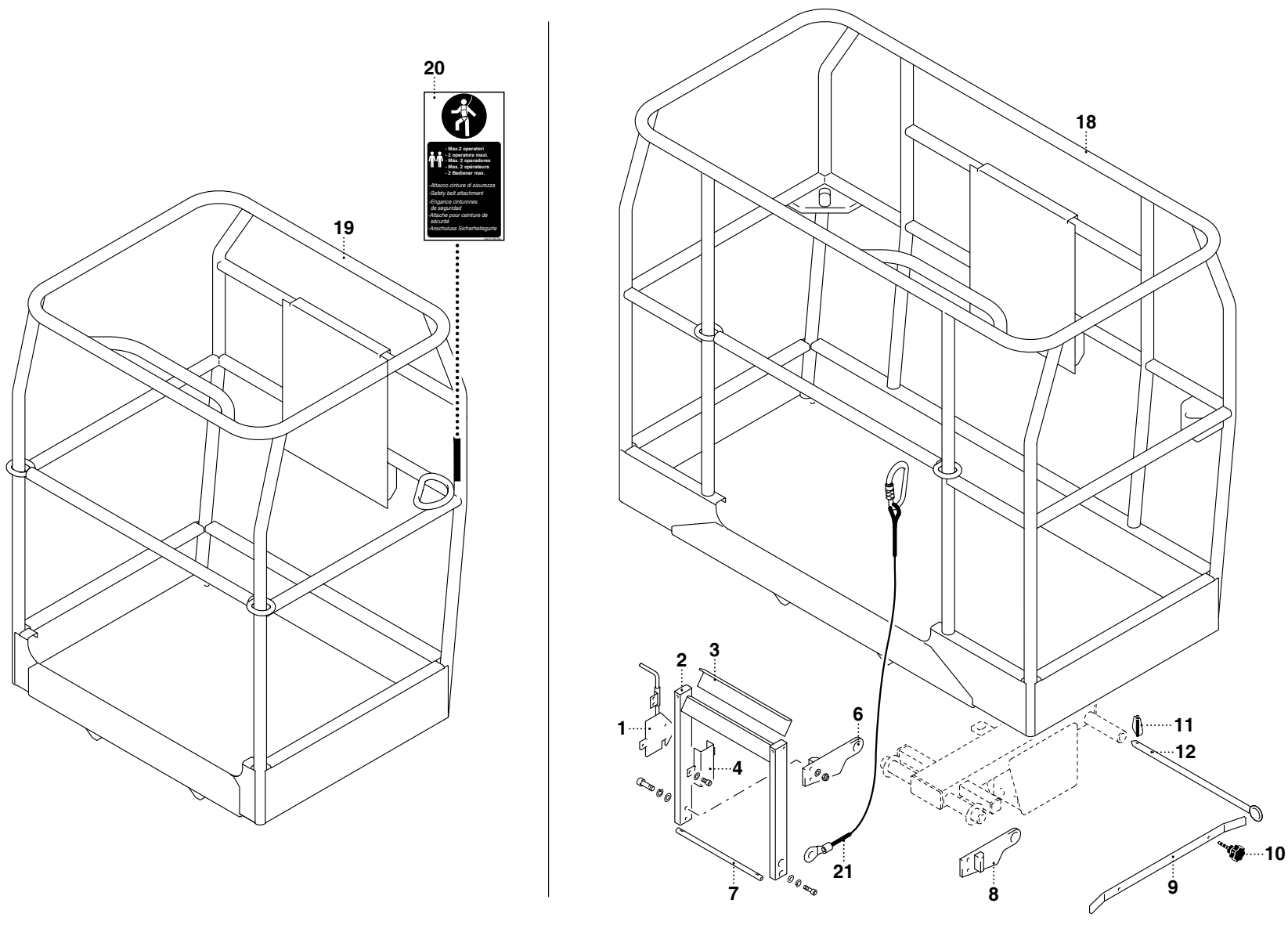

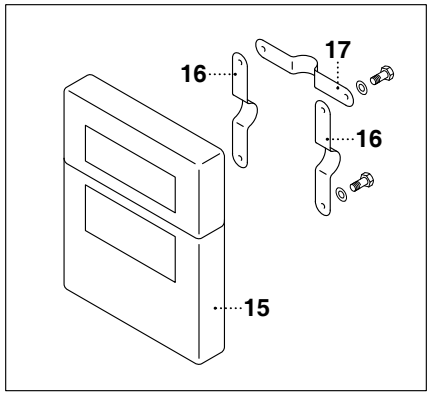

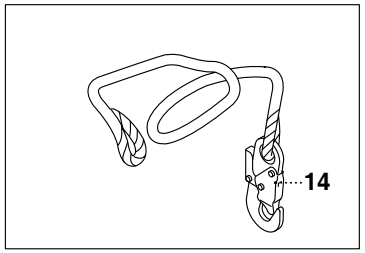

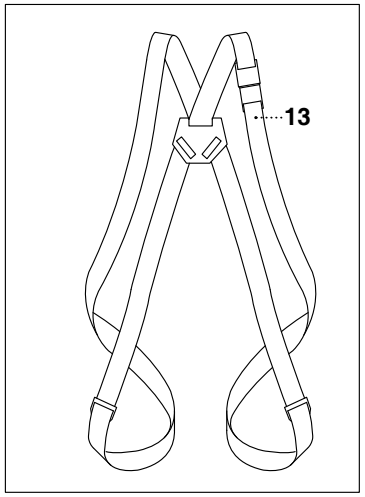

OS-R-A0595-ED

TAV. OI2.01.1.0

POS.	N° CODICE	Q.	DESCRIZIONE	DESIGNATION	BENENNUNG	DESCRIPTION	DENOMINACIONES
1	6.400.012	1	FERMO	ARRET	VERSTELLVORRICHTUNG	LOCK	TOPE
2	6.735.649	1	SUPPORTO	SUPPORT	TRÄGER	SUPPORT	SOPORTE
3	7.583.631	1	PEDANA	PLANCHER	TRITTBLECH	FOOT BOARD	ESTRIBO
4	7.735.650	1	SUPPORTO	SUPPORT	TRÄGER	SUPPORT	SOPORTE
6	6.735.762	1	SUPPORTO	SUPPORT	TRÄGER	SUPPORT	SOPORTE
7	7.696.058	1	ASTA	TIGE	STANGE	ROD	VASTAGO
8	6.735.763	1	SUPPORTO	SUPPORT	TRÄGER	SUPPORT	SOPORTE
9	7.685.399	1	PIATTO	PLAQUE	PLATTE	PLATE	PLATO
10	4.605.011	2	POMELLO	POMMEAU	KNOPF	KNOB	POMO
11	4.305.003	2	COPIGLIA	GOUPILLE	SPLINT	SPLINT PIN	PASADOR
12	7.580.138	2	PERNO	AXE	BOLZEN	PIN	PERNO
13	4.533.004	2	IMBRACATURA	ELINGAGE	ANSCHLANGUNG	HARNESSES	ESLINGA
14	4.533.034	2	FUNE	CABLE	SEIL	CABLE	CABLE
15	4.230.042	1	SCATOLA	BOITE	GEHÄUSE	BOX	CAJA
16	7.730.038	2	STAFFA	ETRIER	BÜGEL	BRACKET	ESTRIBO
17	7.730.039	1	STAFFA	ETRIER	BÜGEL	BRACKET	ESTRIBO
18	6.260.036	1	PIATTAFORMA	PLATE-FORME	PLATTFORM	PLATFORM	PLATAFORMA
19	6.260.035	1	PIATTAFORMA	PLATE-FORME	PLATTFORM	PLATFORM	PLATAFORMA
20	5.746.739	1	TARGHETTA	AUTOCOLLANT	SCHILD	DECAL	ETIQUETA
21	3.920.898	1	KIT CAVO	KIT CABLE	KABELSATZ	CABLE KIT	KIT CABLE

ASPIRAZIONE / MANDATA

ASPIRATION / DEBIT *SUCTION / DELIVERY*
ZUGKRAFT / EINLASS *ASPIRACION / ENVIO*

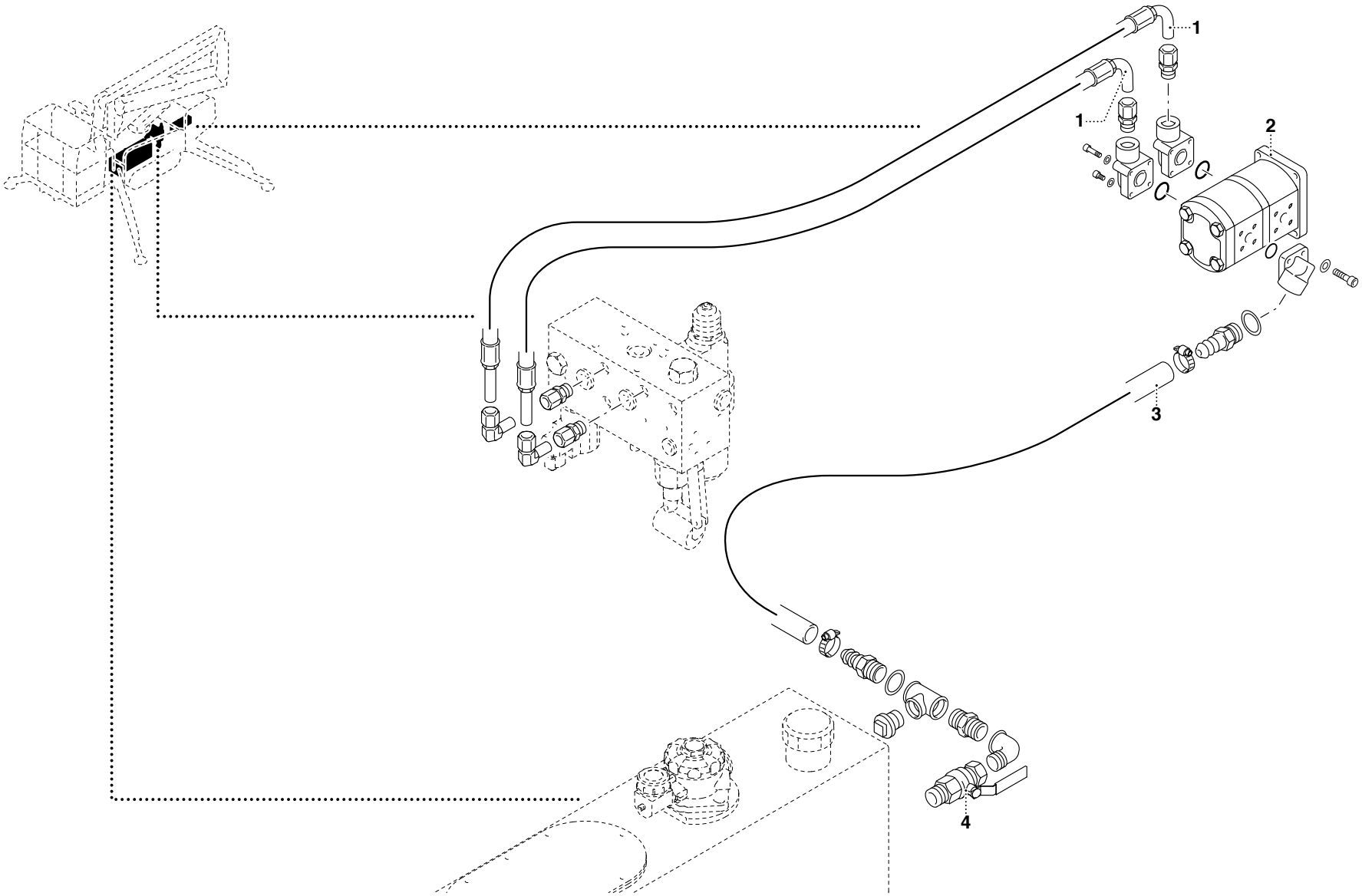

UN07-R-1398-DO

TAV. OL1.01.1.0

POS.	N° CODICE	Q.	DESCRIZIONE	DESIGNATION	BENENNUNG	DESCRIPTION	DENOMINACIONES
1	7.785.334	2	TUBO FLESSIBILE	TUYAU FLEXIBLE	SCHLAUCH	FLEXIBLE HOSE	TUBO FLEXIBLE
2	4.610.158	1	POMPA	POMPE	PUMPE	PUMP	BOMBA
3	9.785.041	1	TUBO FLESSIBILE	TUYAU FLEXIBLE	SCHLAUCH	FLEXIBLE HOSE	TUBO FLEXIBLE
4	4.792.003	1	RUBINETTO	ROBINET	HAHN	COCK	GRIFO

ASPIRAZIONE / MANDATA

ASPIRATION / DEBIT *SUCTION / DELIVERY*
ZUGKRAFT / EINLASS *ASPIRACION / ENVIO*

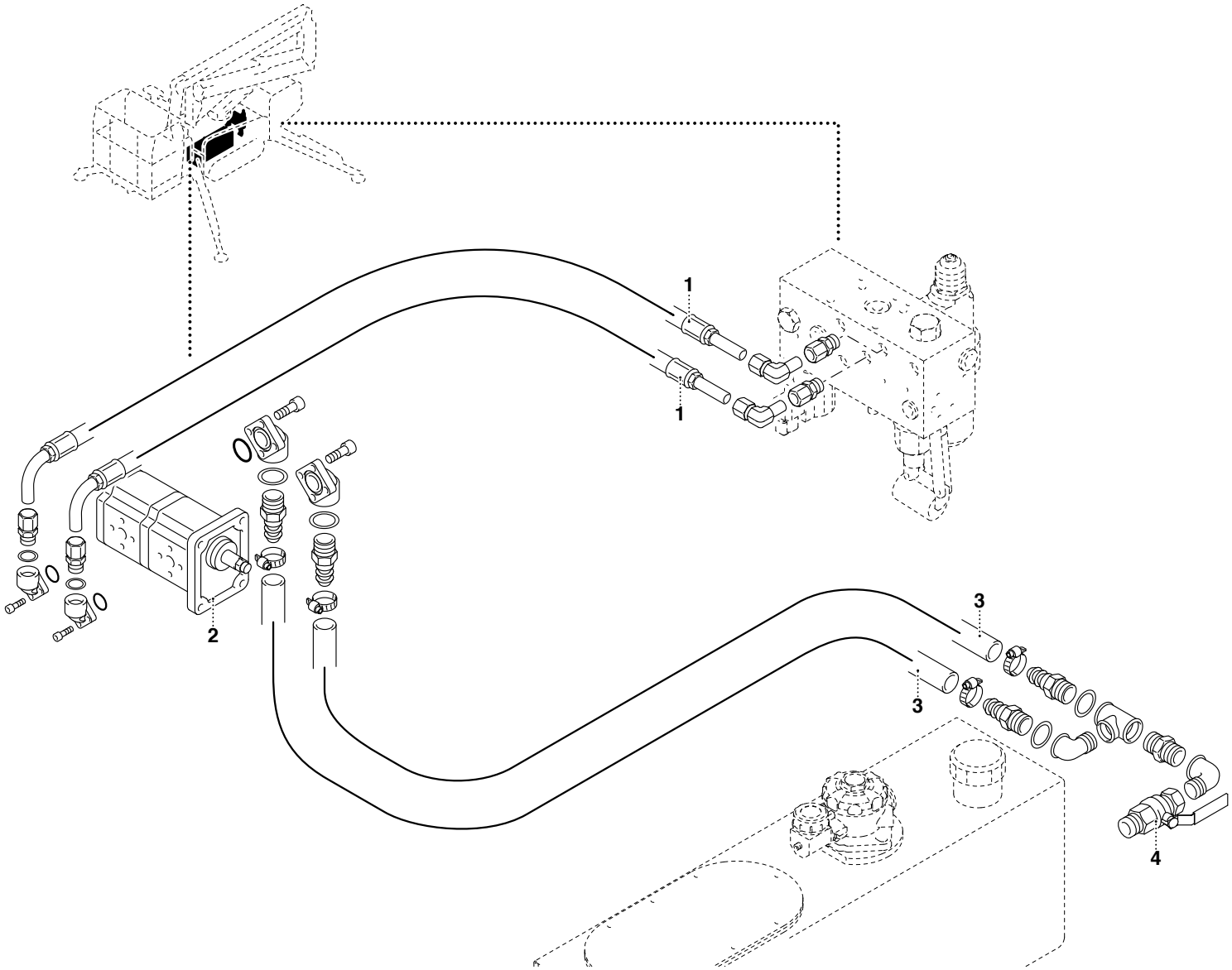

TAV. OL1.02.1.0

POS.	N° CODICE	Q.	DESCRIZIONE	DESIGNATION	BENENNUNG	DESCRIPTION	DENOMINACIONES
1	7.787.555	2	TUBO FLESSIBILE	TUYAU FLEXIBLE	SCHLAUCH	FLEXIBLE HOSE	TUBO FLEXIBLE
2	4.610.215	1	POMPA	POMPE	PUMPE	PUMP	BOMBA
3	9.785.042	2	TUBO FLESSIBILE	TUYAU FLEXIBLE	SCHLAUCH	FLEXIBLE HOSE	TUBO FLEXIBLE
4	4.792.003	1	RUBINETTO	ROBINET	HAHN	COCK	GRIFO

ASPIRAZIONE / MANDATA (VERSIONE BATTERIE)

ASPIRATION / DEBIT (VERS. BATTERIES) *SUCTION / DELIVERY (BATTERY VERS.)*
ZUGKRAFT / EINLASS (BATTERIEVERS.) *ASPIRACION / ENVIO (VERS. BATERIAS)*

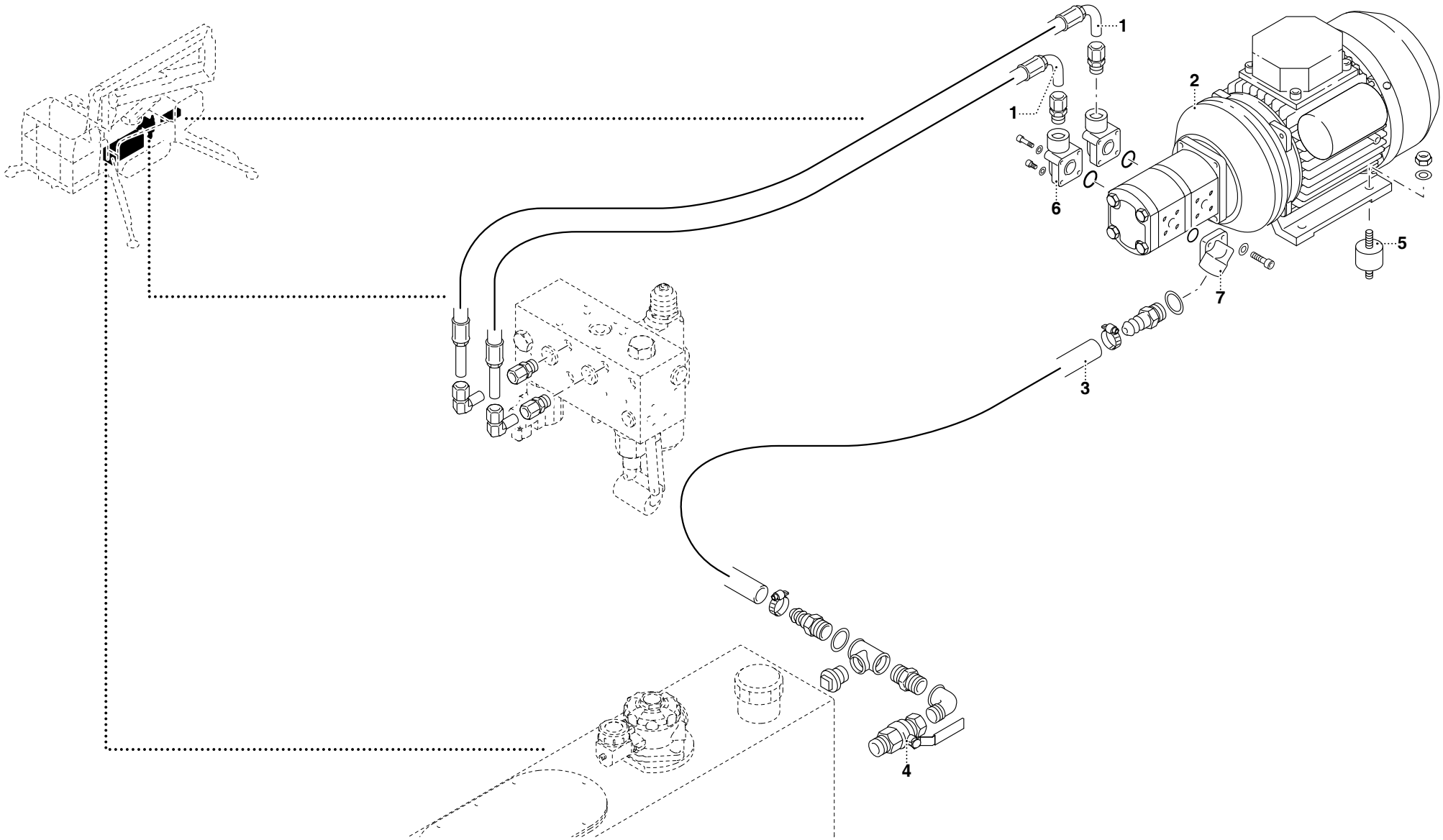

TAV. OL1.10.1.0

POS.	N° CODICE	Q.	DESCRIZIONE	DESIGNATION	BENENNUNG	DESCRIPTION	DENOMINACIONES
1	7.787.555	2	TUBO FLESSIBILE	TUYAU FLEXIBLE	SCHLAUCH	FLEXIBLE HOSE	TUBO FLEXIBLE
2	4.554.050	1	ELETTROPOMPA	ELECTROPOMPE	ELEKTROPUMPE	ELECTRO PUMP	ELECTRO-BOMBA
3	9.785.042	2	TUBO FLESSIBILE	TUYAU FLEXIBLE	SCHLAUCH	FLEXIBLE HOSE	TUBO FLEXIBLE
4	4.792.003	1	RUBINETTO	ROBINET	HAHN	COCK	GRIFO
5	4.125.028	4	ANTIVIBRANTE	PLOT ELASTIQUE	SCHWINGUNGSDAMPFER	PAD	ANTIVIBRANTE
6	4.630.421	2	RACCORDO	RACCORD	ANSCHLUSS	FITTING	RACOR
7	4.630.032	1	RACCORDO	RACCORD	ANSCHLUSS	FITTING	RACOR

MANDATA E SCARICO

DEBIT ET DECHARGE
EINLASS UND AUSLASS

DELIVERY AND DISCHARGE
ENVIO Y DESCARGA

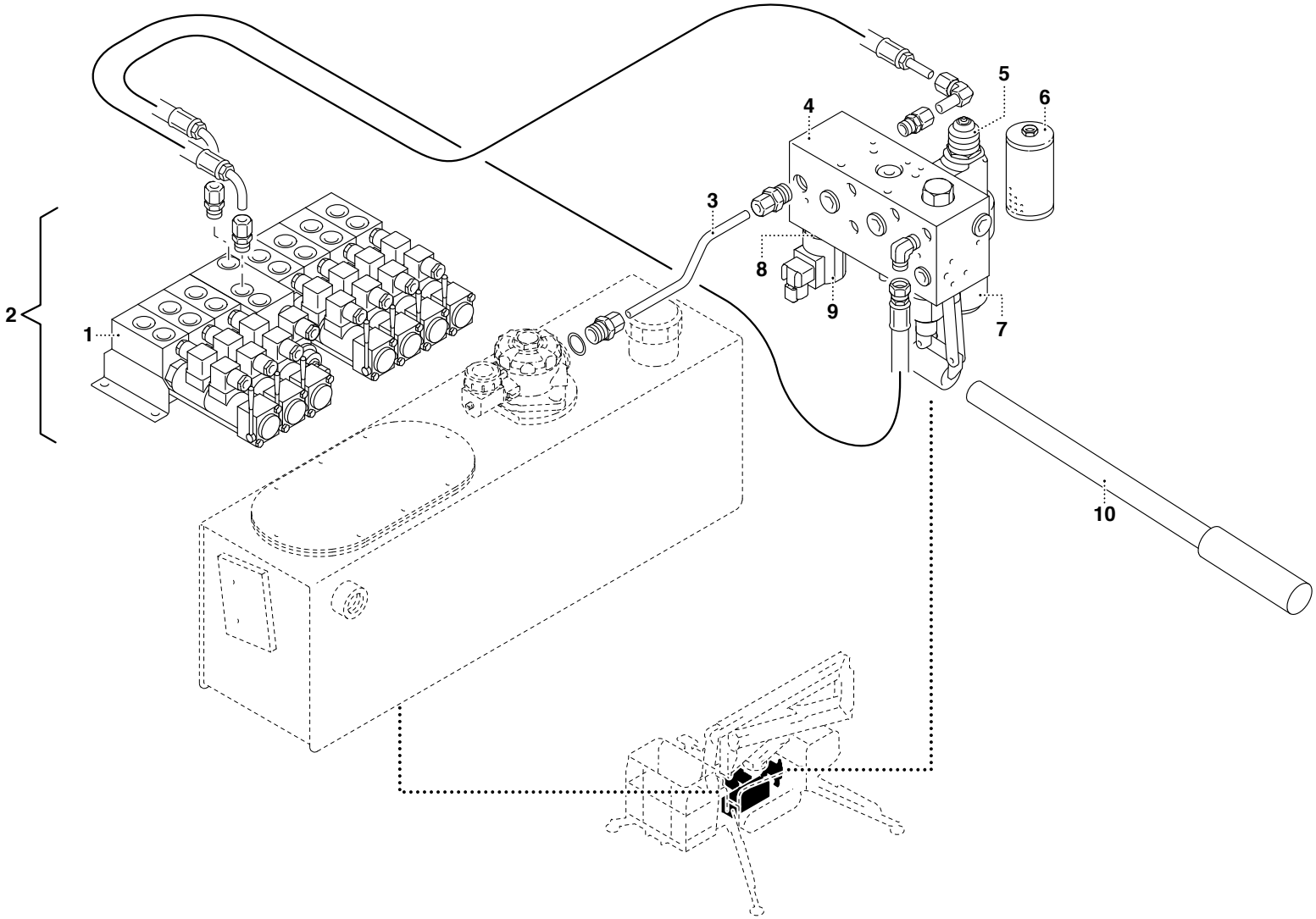

TAV. OM1.01.1.0

POS.	N° CODICE	Q.	DESCRIZIONE	DESIGNATION	BENENNUNG	DESCRIPTION	DENOMINACIONES
1	4.340.021	1	DISTRIBUTORE	DISTRIBUTEUR	STEUERVENTIL	CONTROL VALVE	DISTRIBUIDOR
2	3.921.970	1	KIT DISTRIBUTORE	KIT DISTRIBUTEUR	STEUERVENTILSATZ	CONTROL VALVE KIT	KIT DISTRIBUIDOR
3	7.782.422	1	TUBO RIGIDO	TUYAU RIGIDE	ROHR	PIPE	TUBO RIGIDO
4	5.185.065	1	BLOCCO	BLOC	SPERRE	BLOCK	BLOQUE
5	4.200.017	1	BULBO	BULBE	BULB	BULB	BULBO
6	4.225.107	1	CARTUCCIA FILTRANTE	CARTOUCHE FILTRANT	FILTEREINSATZ	FILTER CARTRIDGE	CARTUCHO FILTRANTE
7	3.922.074	1	FILTRO	FILTRE	FILTER	FILTER	FILTRO
8	4.350.155	1	ELETTROVALVOLA	ELECTROVANNE	ELEKTROVENTIL	ELECTRO VALVE	ELECTRO-VALVULA
9	4.720.087	1	BOBINA	BOBINE	SPULE	COIL	BOBINA
10	4.505.042	1	LEVA	LEVIER	HEBEL	LEVER	PALANCA

MANDATA E SCARICO

DEBIT ET DECHARGE
EINLASS UND AUSLASS

DELIVERY AND DISCHARGE
ENVIO Y DESCARGA

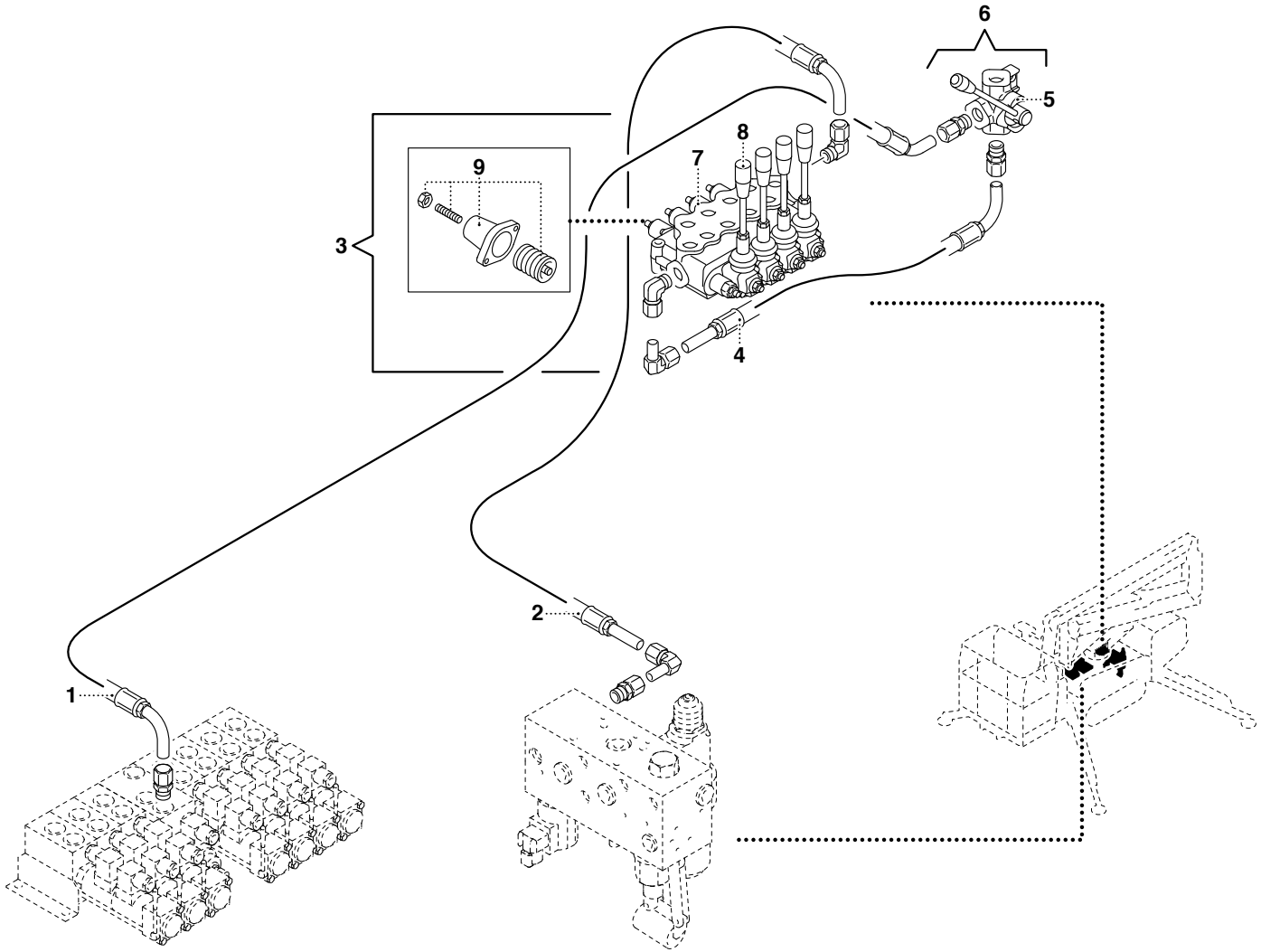

TAV. OM1.01.2.0

POS.	N° CODICE	Q.	DESCRIZIONE	DESIGNATION	BENENNUNG	DESCRIPTION	DENOMINACIONES
1	5.787.557	1	TUBO FLESSIBILE	TUYAU FLEXIBLE	SCHLAUCH	FLEXIBLE HOSE	TUBO FLEXIBLE
2	5.787.556	1	TUBO FLESSIBILE	TUYAU FLEXIBLE	SCHLAUCH	FLEXIBLE HOSE	TUBO FLEXIBLE
3	3.920.028	1	KIT DISTRIBUTORE	KIT DISTRIBUTEUR	STEUERVENTILSATZ	CONTROL VALVE KIT	KIT DISTRIBUIDOR
4	5.787.746	1	TUBO FLESSIBILE	TUYAU FLEXIBLE	SCHLAUCH	FLEXIBLE HOSE	TUBO FLEXIBLE
5	4.325.003	1	DEVIATORE	DEVIATEUR	ABWEISER	DIVERTER	DESVIADOR
6	3.920.718	1	KIT DEVIATORE	KIT DEVIATEUR	ABWEISERSATZ	DIVERTER KIT	KIT DESVIADOR
7	7.340.012	1	DISTRIBUTORE	DISTRIBUTEUR	STEUERVENTIL	CONTROL VALVE	DISTRIBUIDOR
8	4.505.001	4	LEVA	LEVIER	HEBEL	LEVER	PALANCA
9	4.488.337	4	ORGANO DI MANOVRA	DISPOSITIF MOUVEMENT	SCHALTVORRICHTUNG	MOTION DEVICE	ORGANO DE MANOVRA

MANDATA E SCARICO

DEBIT ET DECHARGE
EINLASS UND AUSLASS

DELIVERY AND DISCHARGE
ENVIO Y DESCARGA

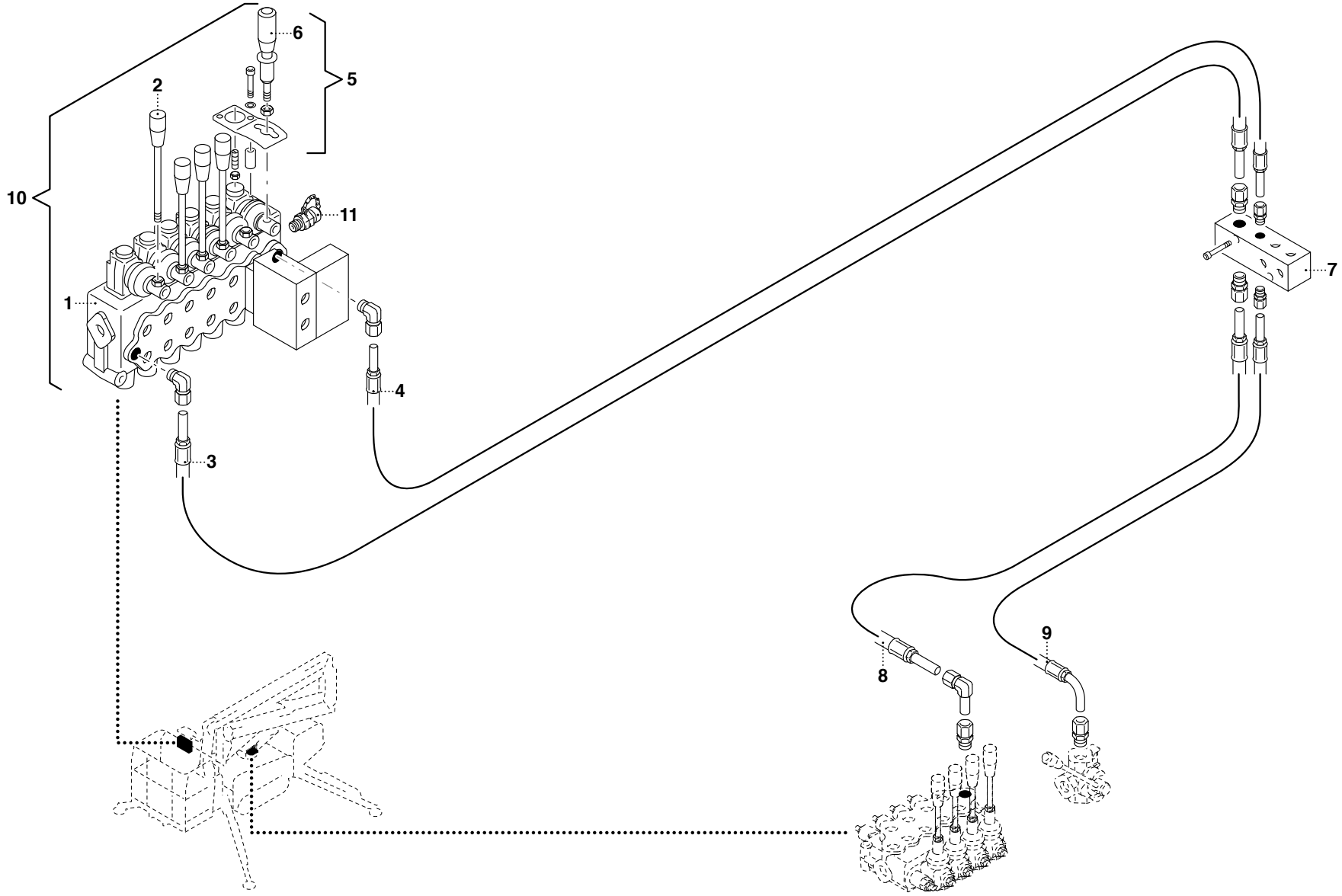

UN07-R-1402-DO

TAV. OM1.01.3.0

POS.	N° CODICE	Q.	DESCRIZIONE	DESIGNATION	BENENNUNG	DESCRIPTION	DENOMINACIONES
1	4.340.035	1	DISTRIBUTORE	DISTRIBUTEUR	STEUERVENTIL	CONTROL VALVE BLOCK	DISTRIBUIDOR
2	4.505.006	5	LEVA	LEVIER	HEBEL	LEVER	PALANCA
3	5.785.192	1	TUBO FLESSIBILE	TUYAU FLEXIBLE	SCHLAUCH	FLEXIBLE HOSE	TUBO FLEXIBLE
4	5.785.225	1	TUBO FLESSIBILE	TUYAU FLEXIBLE	SCHLAUCH	FLEXIBLE HOSE	TUBO FLEXIBLE
5	3.920.467	1	KIT LEVA	KIT LEVIER	HEBELSATZ	LEVER KIT	KIT PALANCA
6	4.505.024	1	LEVA	LEVIER	HEBEL	LEVER	PALANCA
7	5.220.016	1	BLOCCO	BLOC	SPERRE	BLOCK	BLOQUE
8	5.785.564	1	TUBO FLESSIBILE	TUYAU FLEXIBLE	SCHLAUCH	FLEXIBLE HOSE	TUBO FLEXIBLE
9	5.785.562	1	TUBO FLESSIBILE	TUYAU FLEXIBLE	SCHLAUCH	FLEXIBLE HOSE	TUBO FLEXIBLE
10	3.920.027	1	KIT DISTRIBUTORE	KIT DISTRIBUTEUR	STEUERVENTILSATZ	CONTROL VALVE KIT	KIT DISTRIBUIDOR
11	4.480.007	1	RACCORDO	RACCORD	STUTZEN	FITTING	RACOR

IMPIANTO OLEODINAMICO MOTORI TRASLAZIONE

SYST. HYDR. MOTEURS TRANSLATION *TRAVERSE ENGINE OIL-PRESSURE SYST.*
ÖLDYN. ANLAGE FAHRMOTOREN *INST. OLEOD. MOTORES TRANSLACION*

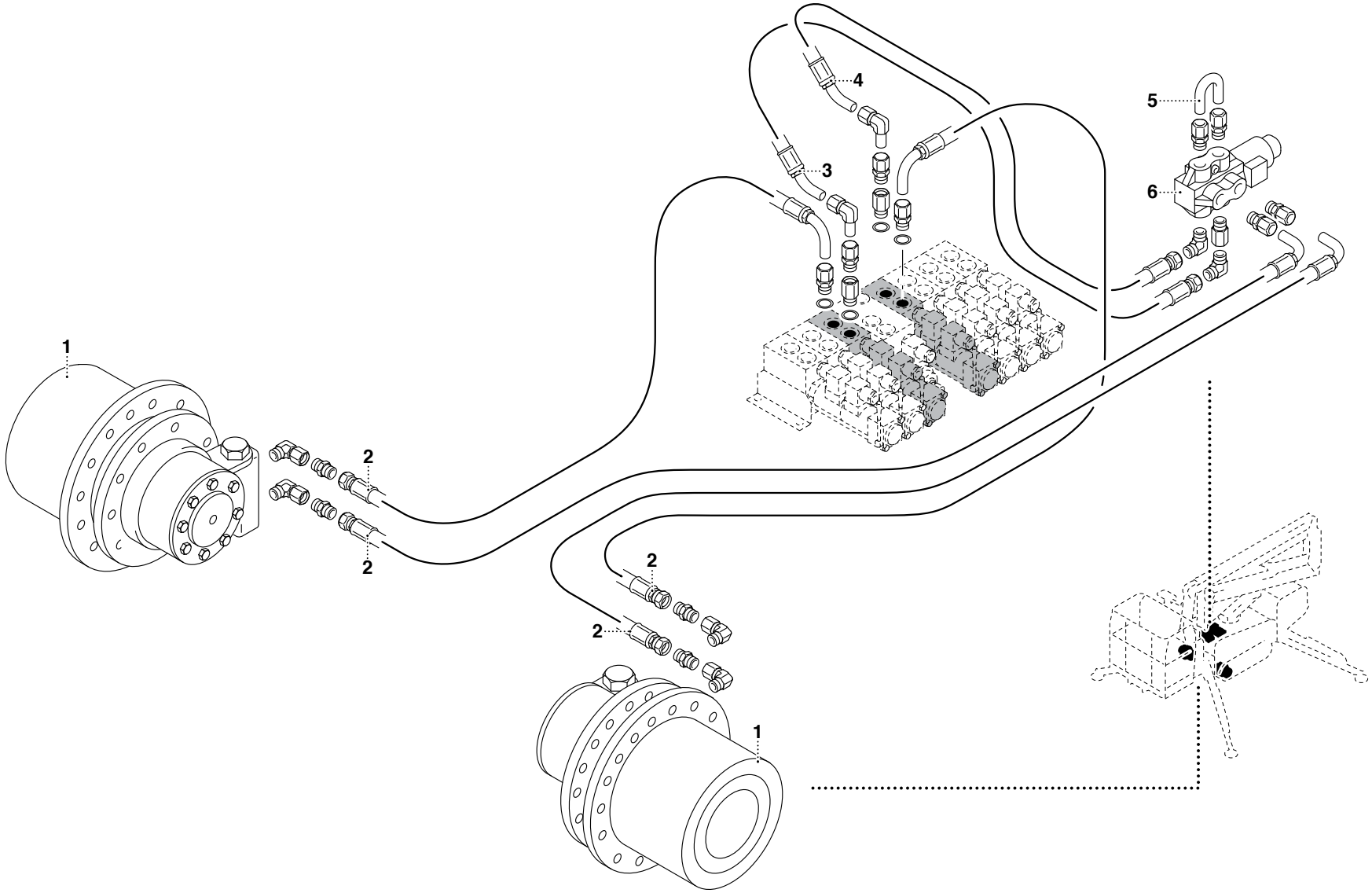

UN07-R-1403-DO

TAV. OM2.01.1.0

POS.	N° CODICE	Q.	DESCRIZIONE	DESIGNATION	BENENNUNG	DESCRIPTION	DENOMINACIONES
1	4.645.013	2	MOTORE	MOTEUR	MOTOR	MOTOR	MOTOR
2	5.786.988	2	TUBO FLESSIBILE	TUYAU FLEXIBLE	SCHLAUCH	FLEXIBLE HOSE	TUBO FLEXIBLE
3	5.787.744	1	TUBO FLESSIBILE	TUYAU FLEXIBLE	SCHLAUCH	FLEXIBLE HOSE	TUBO FLEXIBLE
4	5.787.745	1	TUBO FLESSIBILE	TUYAU FLEXIBLE	SCHLAUCH	FLEXIBLE HOSE	TUBO FLEXIBLE
5	7.782.423	1	TUBO RIGIDO	TUYAU RIGIDE	ROHR	PIPE	TUBO RIGIDO
6	4.325.025	1	DEVIATORE	DEVIATEUR	ABWEISER	DIVERTER	DESVIADOR

IMPIANTO OLEODINAMICO ALLARGAMENTO CINGOLI

SYST. HYDR. ELARGISSEMENT CHENILLES *TRUCKS WIDENING HYDRAULIC SYSTEM*
RAUPENWEITERUNG - HYDRAULIK *INST. HIDR. ENSANCHAMIENTO ORUGAS*

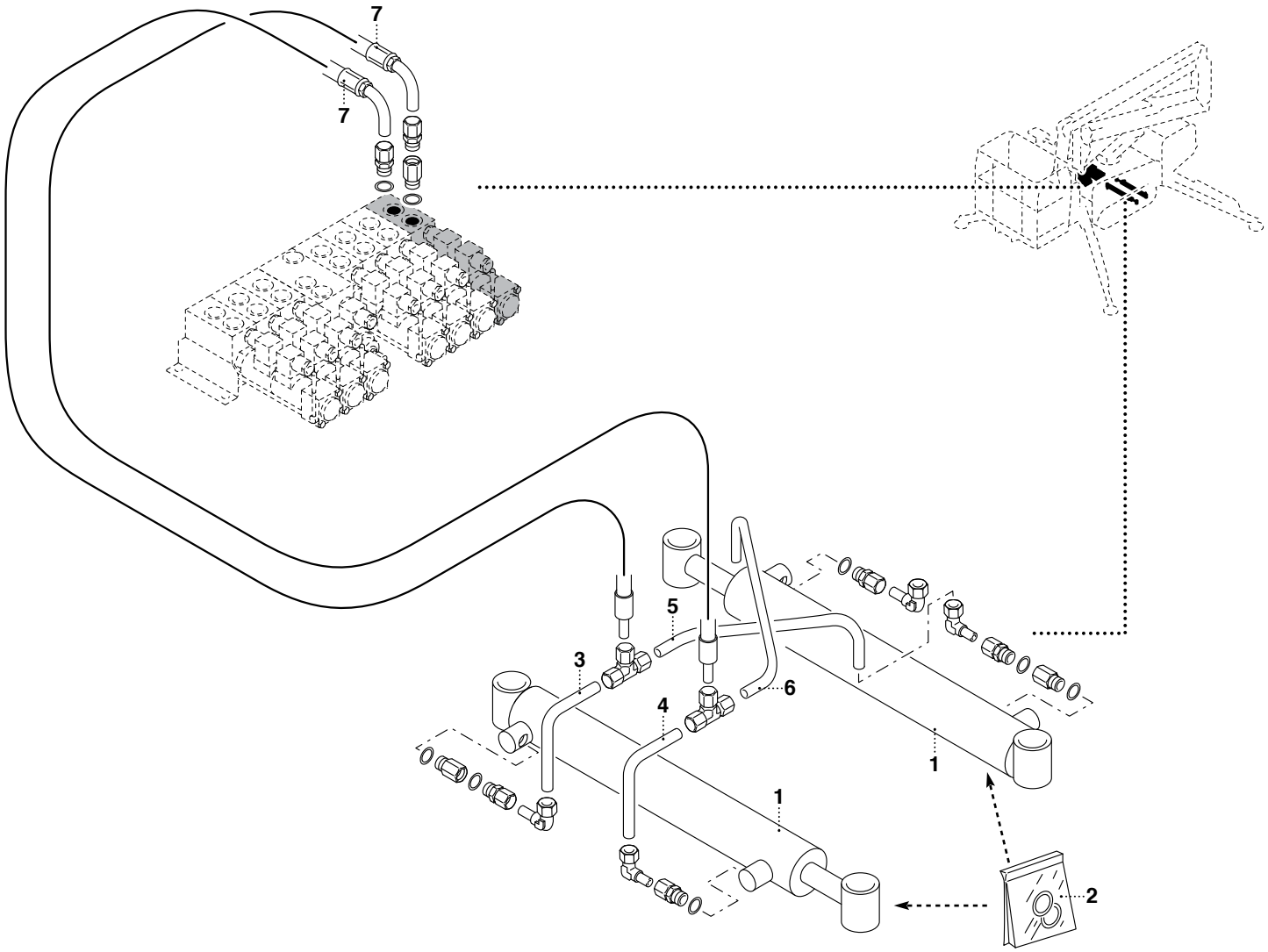

UN07-R-1404-DO

TAV. OM3.01.1.0

POS.	N° CODICE	Q.	DESCRIZIONE	DESIGNATION	BENENNUNG	DESCRIPTION	DENOMINACIONES
1	6.530.271	2	MARTINETTO	VERIN	ZYLINDER	CYLINDER	CILINDRO
2		2	KIT GUARNIZIONI	KIT JOINTS	DICHTUNGSSATZ	SEALS KIT	KIT JUNTAS
3	7.782.389	1	TUBO RIGIDO	TUYAU RIGIDE	ROHR	PIPE	TUBO RIGIDO
4	7.782.387	1	TUBO RIGIDO	TUYAU RIGIDE	ROHR	PIPE	TUBO RIGIDO
5	7.782.388	1	TUBO RIGIDO	TUYAU RIGIDE	ROHR	PIPE	TUBO RIGIDO
6	7.782.386	1	TUBO RIGIDO	TUYAU RIGIDE	ROHR	PIPE	TUBO RIGIDO
7	5.786.532	2	TUBO FLESSIBILE	TUYAU FLEXIBLE	SCHLAUCH	FLEXIBLE HOSE	TUBO FLEXIBLE

IMPIANTO OLEODINAMICO MARTINETTI STABILIZZATORI

SYST. HYDR. VERINS STABILISATEURS *OUTRIGGER CYL. OIL-PRESSURE SYS.*

STÜTZBEINZYL. - ÖLEOD. ANLAGE *INST. OLEODIN. GATOS DE APOYO*

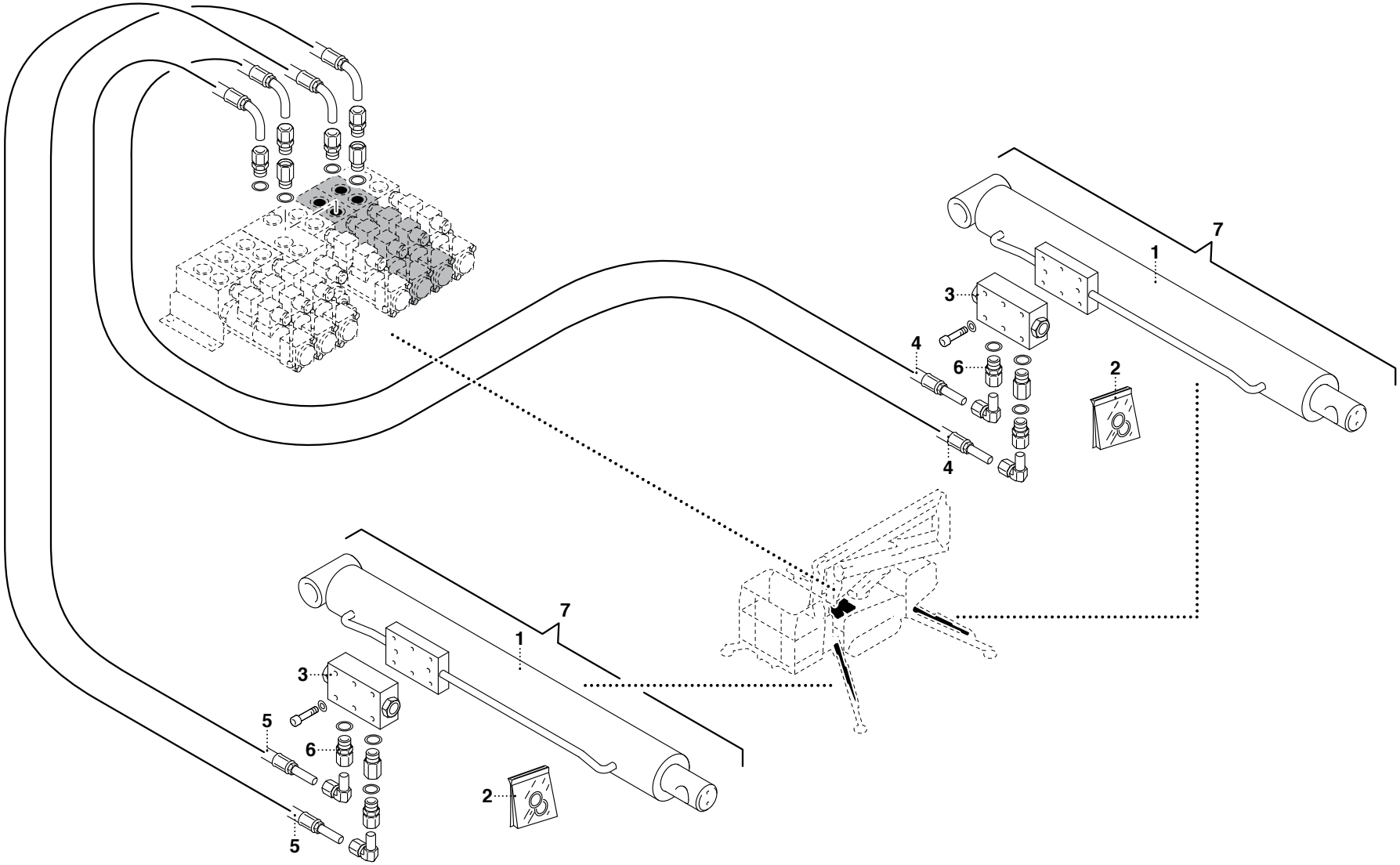

TAV. OM4.01.1.0

POS.	N° CODICE	Q.	DESCRIZIONE	DESIGNATION	BENENNUNG	DESCRIPTION	DENOMINACIONES
1	6.530.353	2	MARTINETTO	VERIN	ZYLINDER	CYLINDER	CILINDRO
2	3.488.989	2	KIT GUARNIZIONI	KIT JOINTS	DICHTUNGSSATZ	SEALS KIT	KIT JUNTAS
3	4.790.276	2	VALVOLA	SOUPAPE	VENTIL	VALVE	VALVULA
4	5.787.554	2	TUBO FLESSIBILE	TUYAU FLEXIBLE	SCHLAUCH	FLEXIBLE HOSE	TUBO FLEXIBLE
5	5.787.553	2	TUBO FLESSIBILE	TUYAU FLEXIBLE	SCHLAUCH	FLEXIBLE HOSE	TUBO FLEXIBLE
6	5.630.739	2	RACCORDO	RACCORD	ANSCHLUSS	FITTING	RACOR
7	3.915.266	1	KIT MARTINETTO	KIT VERIN	ZYLINDERSATZ	CYLINDER KIT	KIT CILINDRO

IMPIANTO OLEODINAMICO MARTINETTI STABILIZZATORI

SYST. HYDR. VERINS STABILISATEURS *OUTRIGGER CYL. OIL-PRESSURE SYS.*
STÜTZBEINZYL. - ÖLEOD. ANLAGE *INST. OLEODIN. GATOS DE APOYO*

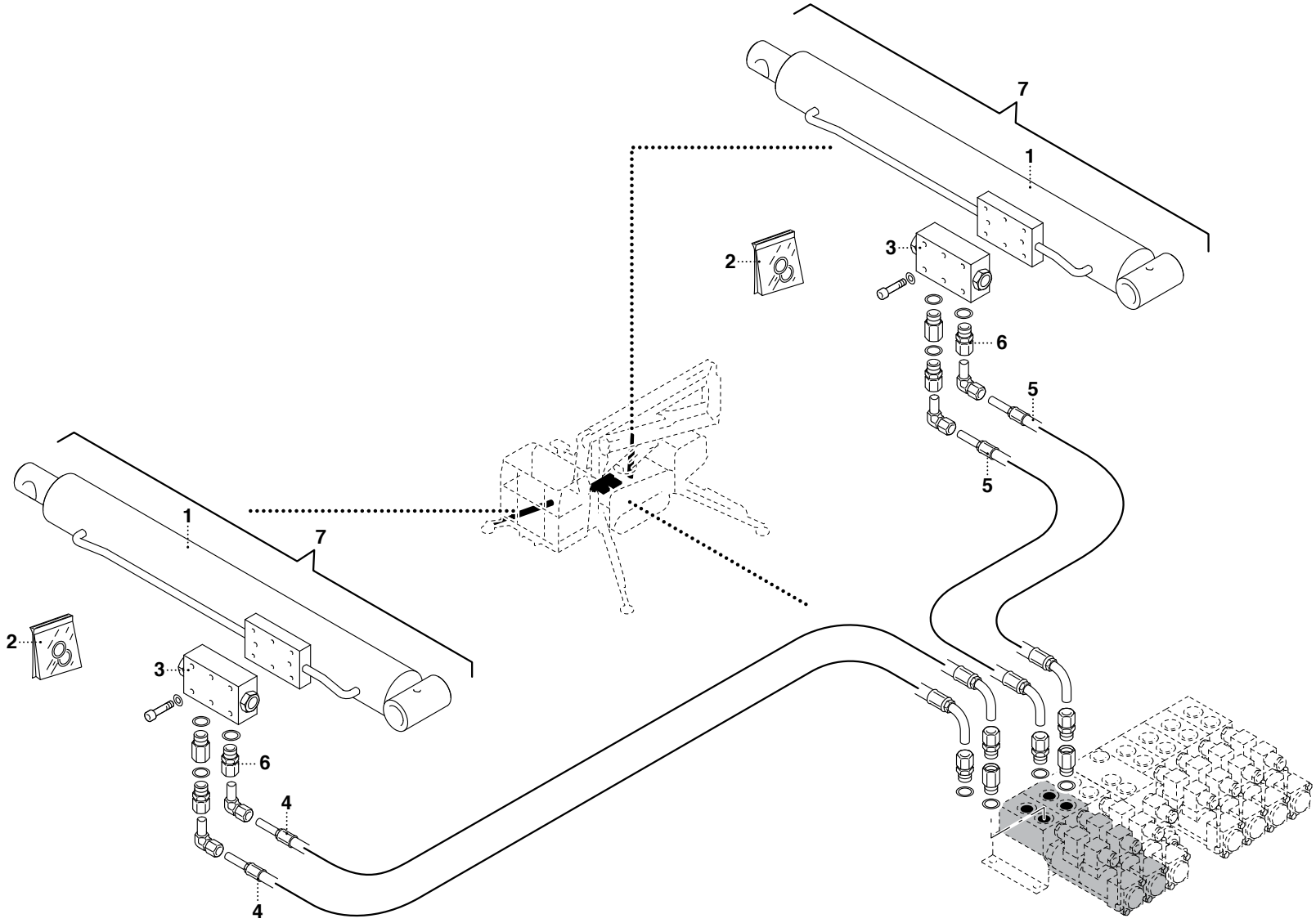

TAV. OM4.02.1.0

POS.	N° CODICE	Q.	DESCRIZIONE	DESIGNATION	BENENNUNG	DESCRIPTION	DENOMINACIONES
1	6.530.353	2	MARTINETTO	VERIN	ZYLINDER	CYLINDER	CILINDRO
2	3.488.989	2	KIT GUARNIZIONI	KIT JOINTS	DICHTUNGSSATZ	SEALS KIT	KIT JUNTAS
3	4.790.277	2	VALVOLA	SOUPAPE	VENTIL	VALVE	VALVULA
4	5.787.553	2	TUBO FLESSIBILE	TUYAU FLEXIBLE	SCHLAUCH	FLEXIBLE HOSE	TUBO FLEXIBLE
5	5.787.554	2	TUBO FLESSIBILE	TUYAU FLEXIBLE	SCHLAUCH	FLEXIBLE HOSE	TUBO FLEXIBLE
6	5.630.739	2	RACCORDO	RACCORD	ANSCHLUSS	FITTING	RACOR
7	3.915.265	1	KIT MARTINETTO	KIT VERIN	ZYLINDERSATZ	CYLINDER KIT	KIT CILINDRO

IMPIANTO OLEODINAMICO ROTAZIONE TORRETTA

SYSTEME HYDR. ROTATION TOURELLE *TURRET ROTATION HYDRAULIC SYSTEM*
TURMROTATIONSHYDRAULIK *EQUIPO OLEOD. ROTACION TORRE*

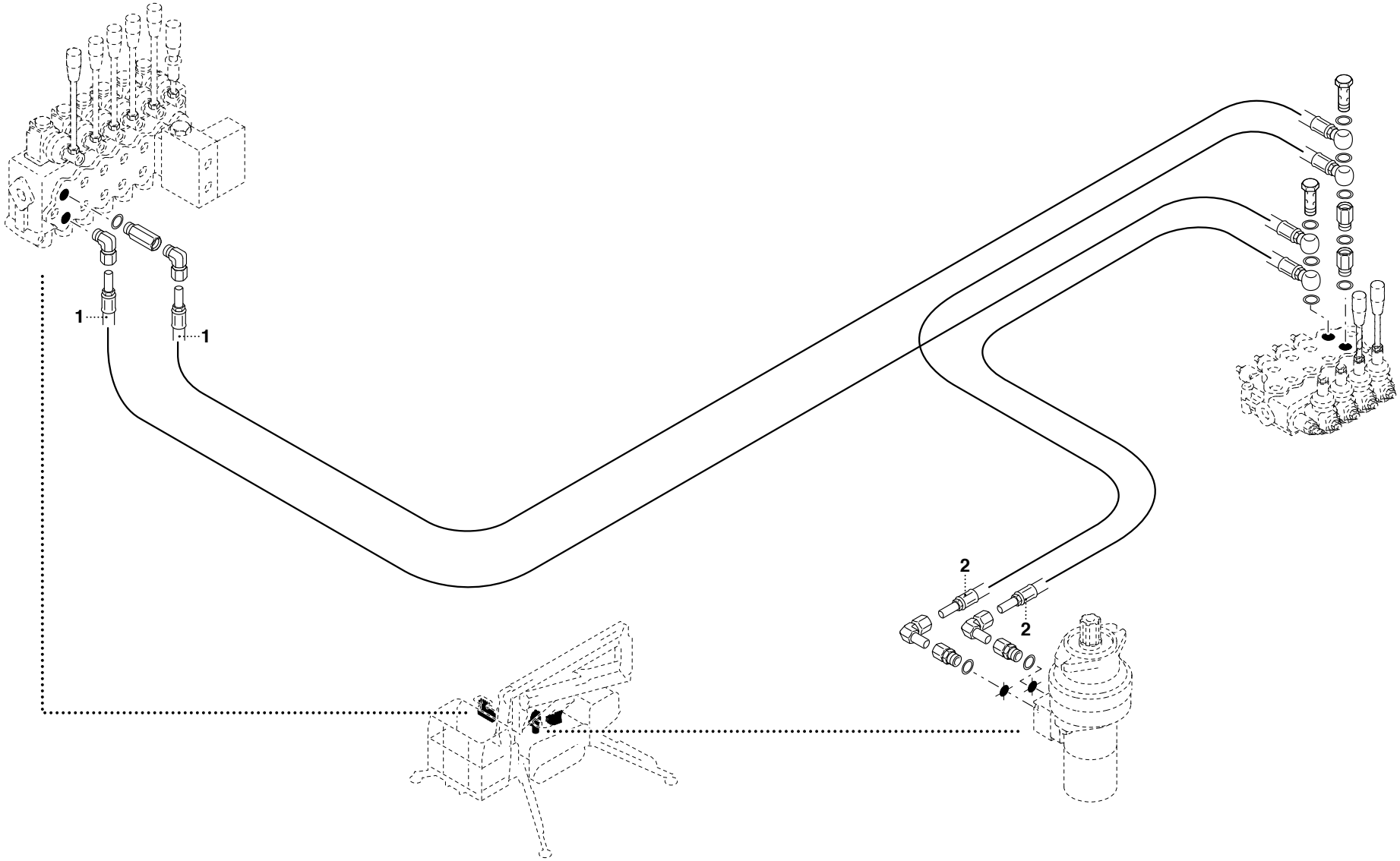

TAV. OM5.01.1.0

POS.	N° CODICE	Q.	DESCRIZIONE	DESIGNATION	BENENNUNG	DESCRIPTION	DENOMINACIONES
1	5.785.239	2	TUBO FLESSIBILE	TUYAU FLEXIBLE	SCHLAUCH	FLEXIBLE HOSE	TUBO FLEXIBLE
2	5.785.228	2	TUBO FLESSIBILE	TUYAU FLEXIBLE	SCHLAUCH	FLEXIBLE HOSE	TUBO FLEXIBLE

OIL&STEEL

IMP. OLEOD. BRANDEGGIO BRACCI ARTICOLATI

CIRCUIT HYDR. PIVOTEMENT DES BRAS ARTICULES
HYDR. ANL. ZUR SCHWENKUNG DER AUSLEGEARME
ARTICULATED BOOMS SLEWING HYD. SYS.
SISTEMA HIDR. ROTACION BRAZOS ARTICULADOS

TAV. OM6.01.1.0

octopus 14

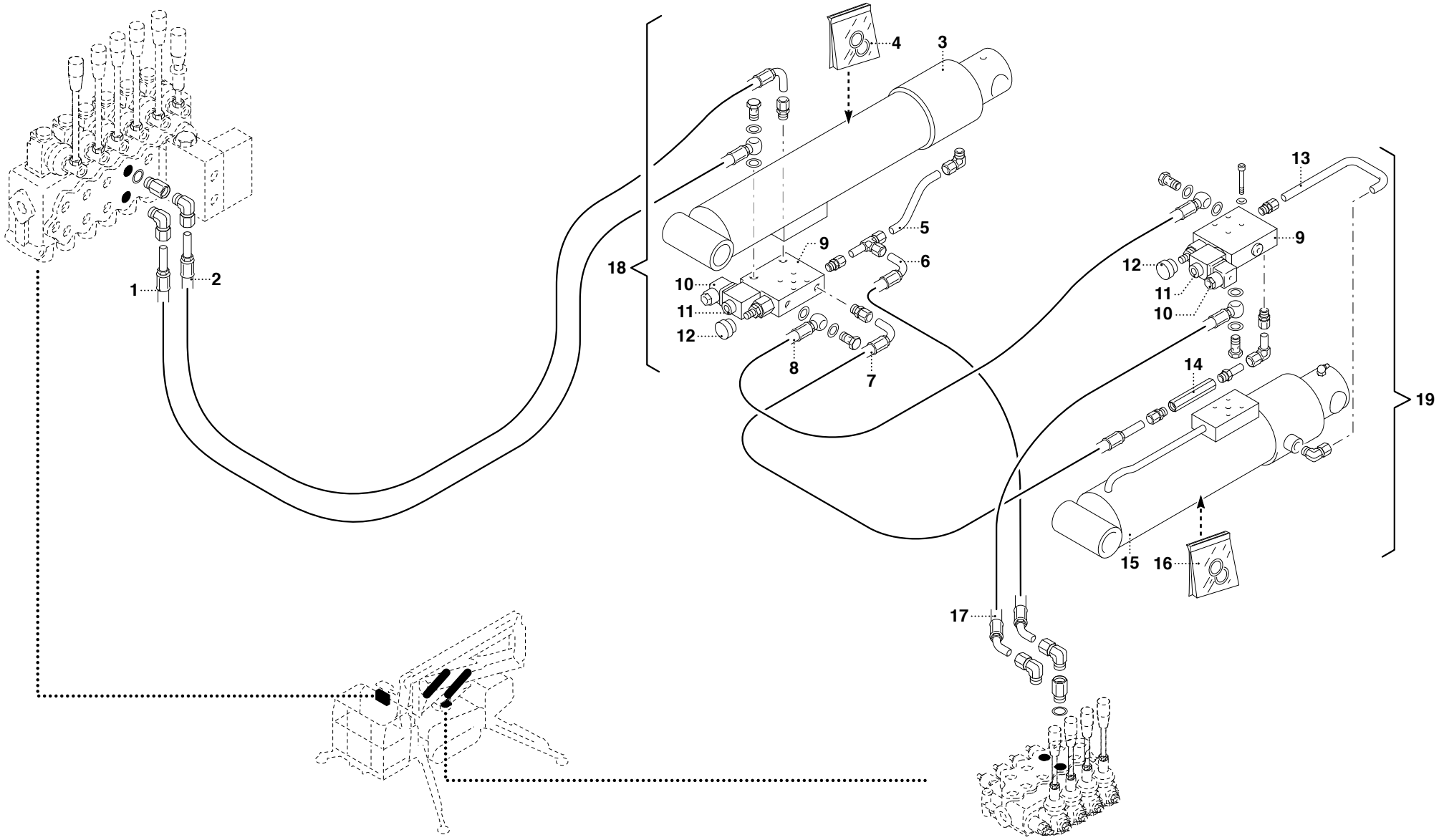

UN07-R-1408-DO

TAV. OM6.01.1.0

POS.	N° CODICE	Q.	DESCRIZIONE	DESIGNATION	BENENNUNG	DESCRIPTION	DENOMINACIONES
1	5.785.191	1	TUBO FLESSIBILE	TUYAU FLEXIBLE	SCHLAUCH	FLEXIBLE HOSE	TUBO FLEXIBLE
2	5.785.224	1	TUBO FLESSIBILE	TUYAU FLEXIBLE	SCHLAUCH	FLEXIBLE HOSE	TUBO FLEXIBLE
3	6.530.291	1	MARTINETTO	VERIN	ZYLINDER	CYLINDER	CILINDRO
4	4.488.128	1	KIT GUARNIZIONI	KIT JOINTS	DICHTUNGSSATZ	SEALS KIT	KIT JUNTAS
5	7.782.746	1	TUBO RIGIDO	TUYAU RIGIDE	ROHR	PIPE	TUBO RIGIDO
6	5.786.785	1	TUBO FLESSIBILE	TUYAU FLEXIBLE	SCHLAUCH	FLEXIBLE HOSE	TUBO FLEXIBLE
7	5.786.008	1	TUBO FLESSIBILE	TUYAU FLEXIBLE	SCHLAUCH	FLEXIBLE HOSE	TUBO FLEXIBLE
8	5.785.877	1	TUBO FLESSIBILE	TUYAU FLEXIBLE	SCHLAUCH	FLEXIBLE HOSE	TUBO FLEXIBLE
9	4.350.159	2	ELETTROVALVOLA	ELECTROVANNE	ELEKTROVENTIL	ELECTROVALVE	ELECTRO-VALVULA
10	4.295.001	2	CONNETTORE	CONNECTEUR	VERBINDER	CONNECTOR	CONECTOR
11	4.720.033	2	BOBINA	BOBINE	SPULE	COIL	BOBINA
12	4.740.033	2	TAPPO	BOUCHON	VERSCHLUSSDECKEL	PLUG	TAPON
13	5.782.744	1	TUBO RIGIDO	TUYAU RIGIDE	ROHR	PIPE	TUBO RIGIDO
14	4.790.154	1	VALVOLA	SOUPAPE	VENTIL	VALVE	VALVULA
15	6.530.113	1	MARTINETTO	VERIN	ZYLINDER	CYLINDER	CILINDRO
16	4.488.128	1	KIT GUARNIZIONI	KIT JOINTS	DICHTUNGSSATZ	SEALS KIT	KIT JUNTAS
17	5.785.873	1	TUBO FLESSIBILE	TUYAU FLEXIBLE	SCHLAUCH	FLEXIBLE HOSE	TUBO FLEXIBLE
18	3.915.224	1	KIT MARTINETTO	KIT VERIN	ZYLINDERSATZ	CYLINDER KIT	KIT CILINDRO
19	3.915.223	1	KIT MARTINETTO	KIT VERIN	ZYLINDERSATZ	CYLINDER KIT	KIT CILINDRO

IMPIANTO OLEODINAMICO BRANDEGGIO BRACCI

SYSTEME HYDR. ARTICULATION BRAS
HYDRAULIK FÜR ARMSCHWENKUNG
ARTICULATION BOOMS HYDRAULIC SYSTEM
EQUIPO OLEODIN. OSCILACION BRAZOS

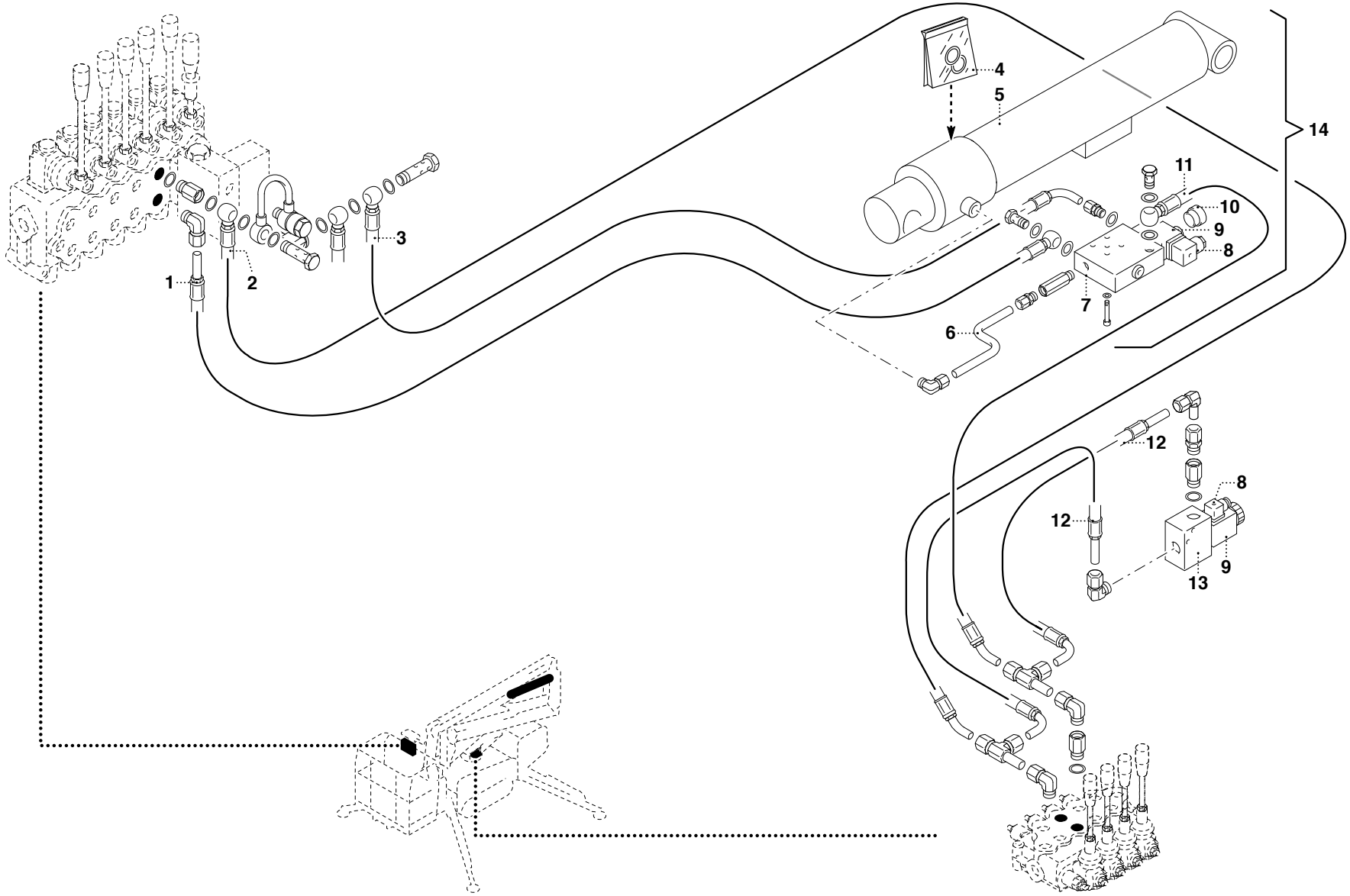

TAV. OM7.01.1.0

POS.	N° CODICE	Q.	DESCRIZIONE	DESIGNATION	BENENNUNG	DESCRIPTION	DENOMINACIONES
1	5.785.190	1	TUBO FLESSIBILE	TUYAU FLEXIBLE	SCHLAUCH	FLEXIBLE HOSE	TUBO FLEXIBLE
2	5.785.227	1	TUBO FLESSIBILE	TUYAU FLEXIBLE	SCHLAUCH	FLEXIBLE HOSE	TUBO FLEXIBLE
3	5.785.195	1	TUBO FLESSIBILE	TUYAU FLEXIBLE	SCHLAUCH	FLEXIBLE HOSE	TUBO FLEXIBLE
4	3.488.776	1	KIT GUARNIZIONI	KIT JOINTS	DICHTUNGSSATZ	SEALS KIT	KIT JUNTAS
5	6.530.256	1	MARTINETTO	VERIN	ZYLINDER	CYLINDER	CILINDRO
6	5.782.745	1	TUBO RIGIDO	TUYAU RIGIDE	ROHR	PIPE	TUBO RIGIDO
7	4.350.159	1	ELETTROVALVOLA	ELECTROVANNE	ELEKTROVENTIL	ELECTROVALVE	ELECTRO-VALVULA
8	4.295.001	2	CONNETTORE	CONNECTEUR	VERBINDER	CONNECTOR	CONECTOR
9	4.720.091	2	BOBINA	BOBINE	SPULE	COIL	BOBINA
10	4.740.033	1	TAPPO	BOUCHON	VERSCHLUSSDECKEL	PLUG	TAPON
11	5.785.874	1	TUBO FLESSIBILE	TUYAU FLEXIBLE	SCHLAUCH	FLEXIBLE HOSE	TUBO FLEXIBLE
12	5.785.464	2	TUBO FLESSIBILE	TUYAU FLEXIBLE	SCHLAUCH	FLEXIBLE HOSE	TUBO FLEXIBLE
13	4.350.079	1	ELETTROVALVOLA	ELECTROVANNE	ELEKTROVENTIL	ELECTROVALVE	ELECTRO-VALVULA
14	3.915.225	1	KIT MARTINETTO	KIT VERIN	ZYLINDERSATZ	CYLINDER KIT	KIT CILINDRO

OIL&STEEL

IMPIANTO OLEDINAMICO MARTINETTO SFILO BRACCI

SYSTEME HYDR. VERIN TELESCOPAGE BRAS — *BOOMS EXTENSION CYLINDER HYDR. SYSTEM*

HYDRAULIK FÜR AUSZIEHENZYLINDER DER ARME — *EQUIPO OLEODIN. GATO EXTENSION BRAZOS*

TAV. OM8.01.1.0

octopus 14

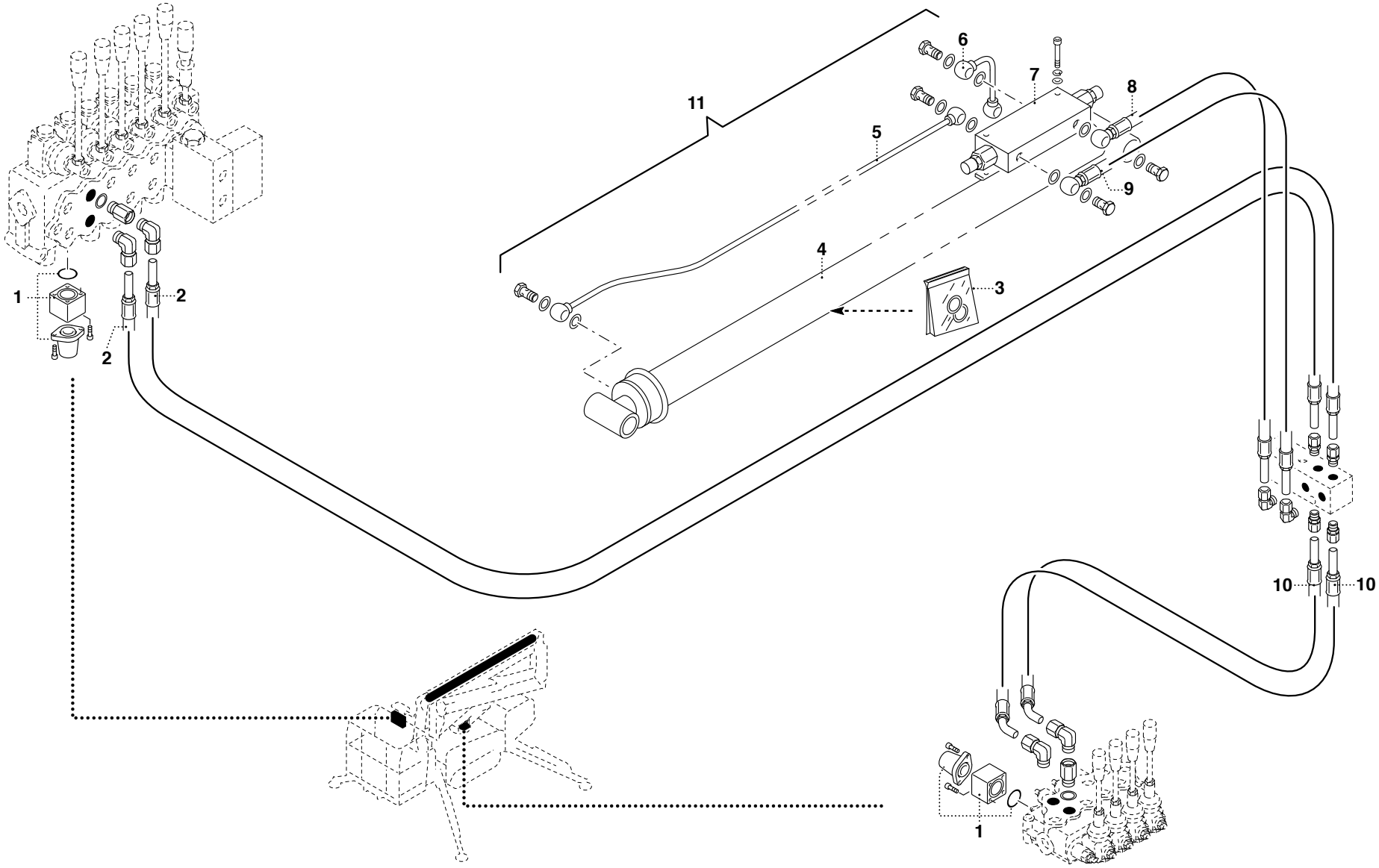

UN07-R-1410-DO

TAV. OM8.01.1.0

POS.	N° CODICE	Q.	DESCRIZIONE	DESIGNATION	BENENNUNG	DESCRIPTION	DENOMINACIONES
1	4.488.694	2	KIT CONNETTORE	KIT CONNECTEUR	VERBINDERSATZ	CONNECTION KIT	KIT CONEXION
2	5.785.192	2	TUBO FLESSIBILE	TUYAU FLEXIBLE	SCHLAUCH	FLEXIBLE HOSE	TUBO FLEXIBLE
3	4.488.126	1	KIT GUARNIZIONI	KIT JOINTS	DICHTUNGSSATZ	SEALS KIT	KIT JUNTAS
4	6.530.282	1	MARTINETTO	VERIN	ZYLINDER	CYLINDER	CILINDRO
5	5.782.748	1	TUBO RIGIDO	TUYAU RIGIDE	ROHR	PIPE	TUBO RIGIDO
6	5.782.747	1	TUBO RIGIDO	TUYAU RIGIDE	ROHR	PIPE	TUBO RIGIDO
7	4.790.210	1	VALVOLA	SOUPAPE	VENTIL	VALVE	VALVULA
8	5.787.267	1	TUBO FLESSIBILE	TUYAU FLEXIBLE	SCHLAUCH	FLEXIBLE HOSE	TUBO FLEXIBLE
9	5.787.268	1	TUBO FLESSIBILE	TUYAU FLEXIBLE	SCHLAUCH	FLEXIBLE HOSE	TUBO FLEXIBLE
10	5.787.563	2	TUBO FLESSIBILE	TUYAU FLEXIBLE	SCHLAUCH	FLEXIBLE HOSE	TUBO FLEXIBLE
11	3.915.195	1	KIT MARTINETTO	KIT VERIN	ZYLINDERSATZ	CYLINDER KIT	KIT CILINDRO

IMPIANTO OLEODINAMICO "JIB"

SYSTEME HYDRAULIQUE "JIB"
"JIB"-HYDRAULIK
"JIB"-HYDRAULIC SYSTEM
EQUIPO OLEODINAMICO "JIB"

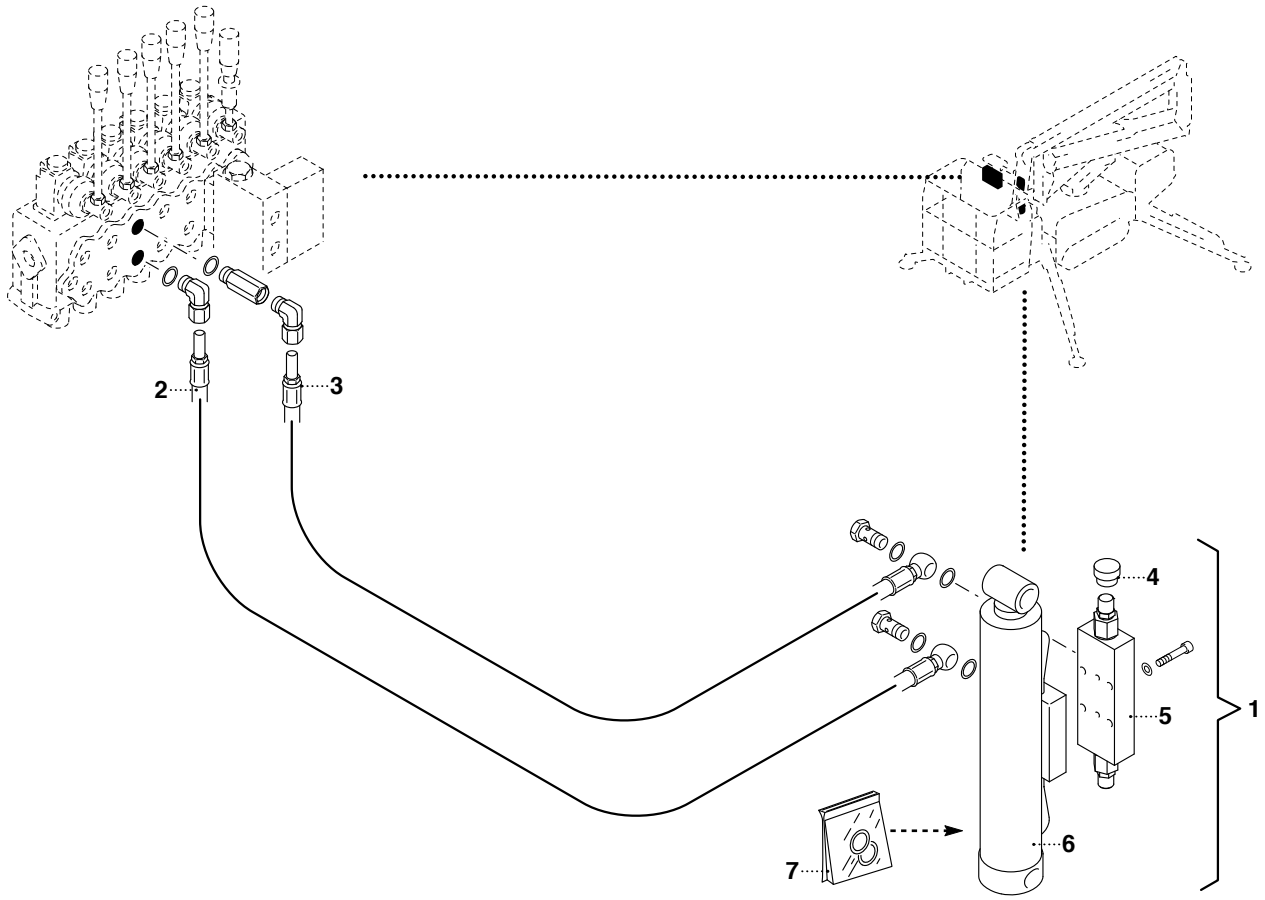

TAV. OM9.01.1.0

POS.	N° CODICE	Q.	DESCRIZIONE	DESIGNATION	BENENNUNG	DESCRIPTION	DENOMINACIONES
1	6.530.263	1	KIT MARTINETTO	KIT VERIN	ZYLINDERSATZ	CYLINDER KIT	KIT CILINDRO
2	5.785.901	1	TUBO FLESSIBILE	TUYAU FLEXIBLE	SCHLAUCH	FLEXIBLE HOSE	TUBO FLEXIBLE
3	5.787.561	1	TUBO FLESSIBILE	TUYAU FLEXIBLE	SCHLAUCH	FLEXIBLE HOSE	TUBO FLEXIBLE
4	4.740.033	2	TAPPO	BOUCHON	VERSCHLUSSDECKEL	PLUG	TAPON
5	4.790.129	1	VALVOLA	SOUPAPE	VENTIL	VALVE	VALVULA
6	6.530.263	1	MARTINETTO	VERIN	ZYLINDER	CYLINDER	CILINDRO
7	3.488.802	1	KIT GUARNIZIONI	KIT JOINTS	DICHTUNGSSATZ	SEALS KIT	KIT JUNTAS

IMPIANTO OLEODINAMICO BILANCIAMENTO

SYSTEME HYDRAULIQUE NIVELLEMENT *LEVELLING HYDRAULIC SYSTEM*
HYDRAULIK FÜR NIVELLIERUNG *EQUIPO OLEODINAMICO NIVELACION*

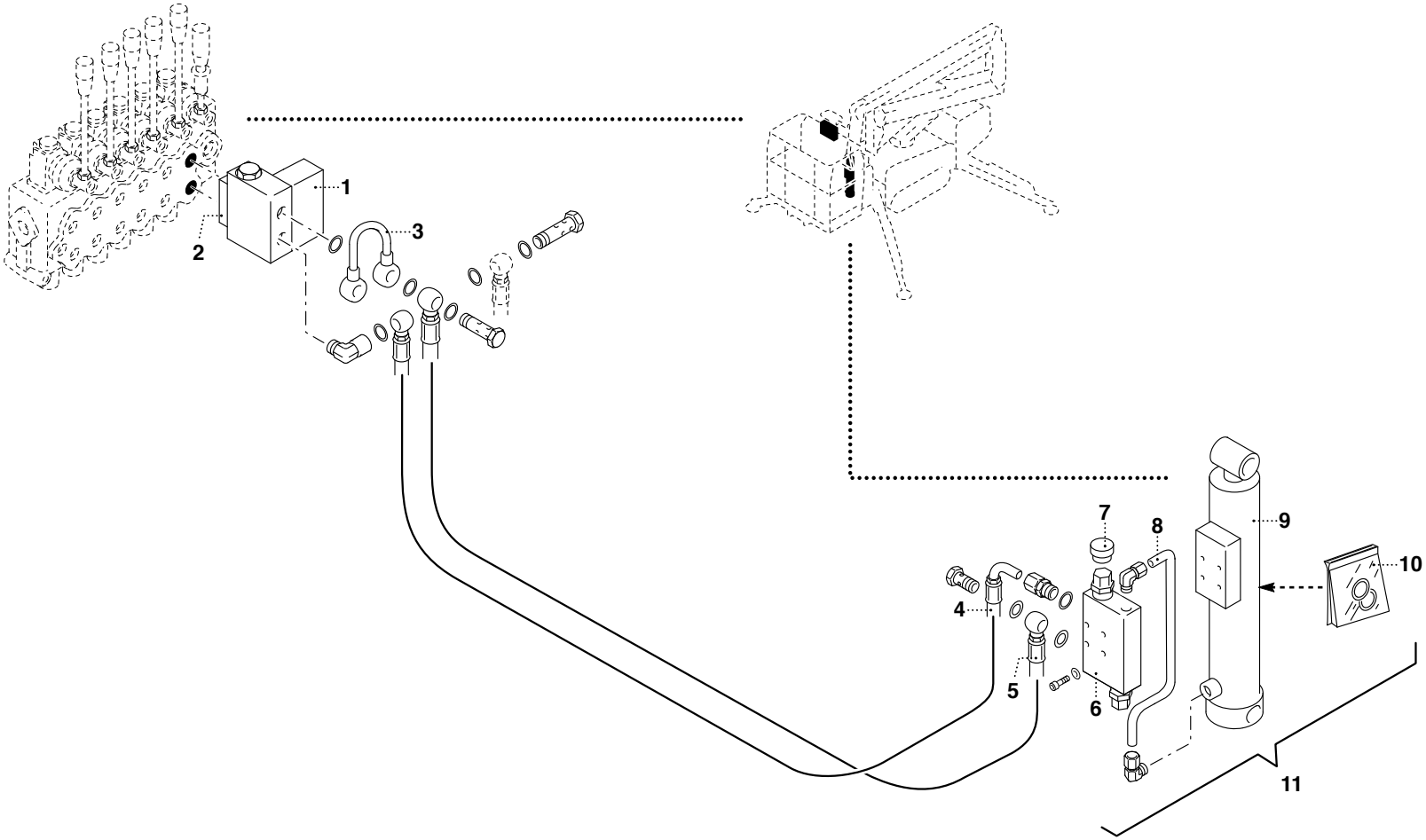

TAV. OM10.01.1.0

POS.	N° CODICE	Q.	DESCRIZIONE	DESIGNATION	BENENNUNG	DESCRIPTION	DENOMINACIONES
1	3.920.020	1	VALVOLA	SOUPAPE	VENTIL	VALVE	VALVULA
2	5.220.017	1	BASE	EMBASE	KRANFUSS	BASE	BASE
3	7.782.019	1	TUBO RIGIDO	TUYAU RIGIDE	ROHR	PIPE	TUBO RIGIDO
4	5.787.560	1	TUBO FLESSIBILE	TUYAU FLEXIBLE	SCHLAUCH	FLEXIBLE HOSE	TUBO FLEXIBLE
5	5.787.559	1	TUBO FLESSIBILE	TUYAU FLEXIBLE	SCHLAUCH	FLEXIBLE HOSE	TUBO FLEXIBLE
6	4.790.111	1	VALVOLA	SOUPAPE	VENTIL	VALVE	VALVULA
7	4.740.033	2	TAPPO	BOUCHON	VERSCHLUSSDECKEL	PLUG	TAPON
8	5.782.749	1	TUBO RIGIDO	TUYAU RIGIDE	ROHR	PIPE	TUBO RIGIDO
9	6.530.258	1	MARTINETTO	VERIN	ZYLINDER	CYLINDER	CILINDRO
10	3.488.788	1	KIT GUARNIZIONI	KIT JOINTS	DICHTUNGSSATZ	SEALS KIT	KIT JUNTAS
11	3.915.154	1	KIT MARTINETTO	KIT VERIN	ZYLINDERSATZ	CYLINDER KIT	KIT CILINDRO

IMPIANTO ARIA COMPRESSA - ACQUA

INSTALLATION AIR COMPRIME - EAU
DRUCKLUFTANLAGE - WASSER
COMPRESSED AIR SYSTEM - WATER
INSTALACION AIRE COMPRIMIDO - AGUA

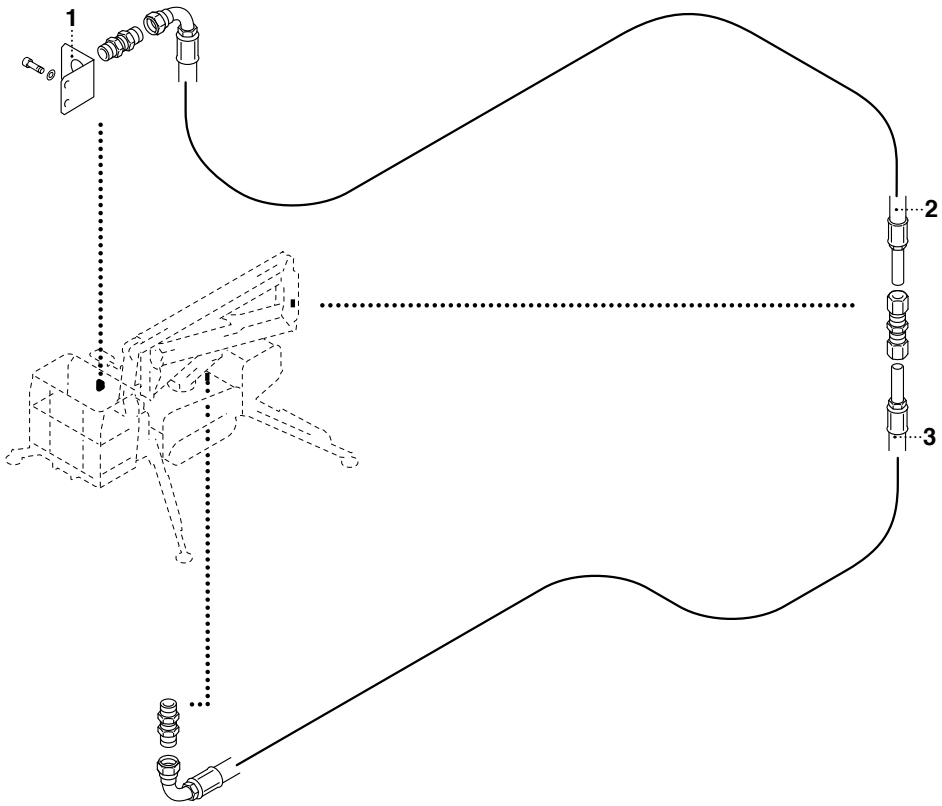

TAV. OM11.01.1.0

POS.	N° CODICE	Q.	DESCRIZIONE	DESIGNATION	BENENNUNG	DESCRIPTION	DENOMINACIONES
1	7.730.071	1	SUPPORTO	SUPPORT	TRÄGER	SUPPORT	SOPORTE
2	5.786.303	1	TUBO FLESSIBILE	TUYAU FLEXIBLE	SCHLAUCH	FLEXIBLE HOSE	TUBO FLEXIBLE
3	5.786.068	1	TUBO FLESSIBILE	TUYAU FLEXIBLE	SCHLAUCH	FLEXIBLE HOSE	TUBO FLEXIBLE

OIL&STEEL

IMPIANTO ELETTRICO

INSTALLATION ELECTRIQUE — *ELECTRIC SYSTEM*

ELEKTRISCHE ANLAGE — *INSTALACION ELECTRICA*

TAV. ON1.01.1.0

octopus 14

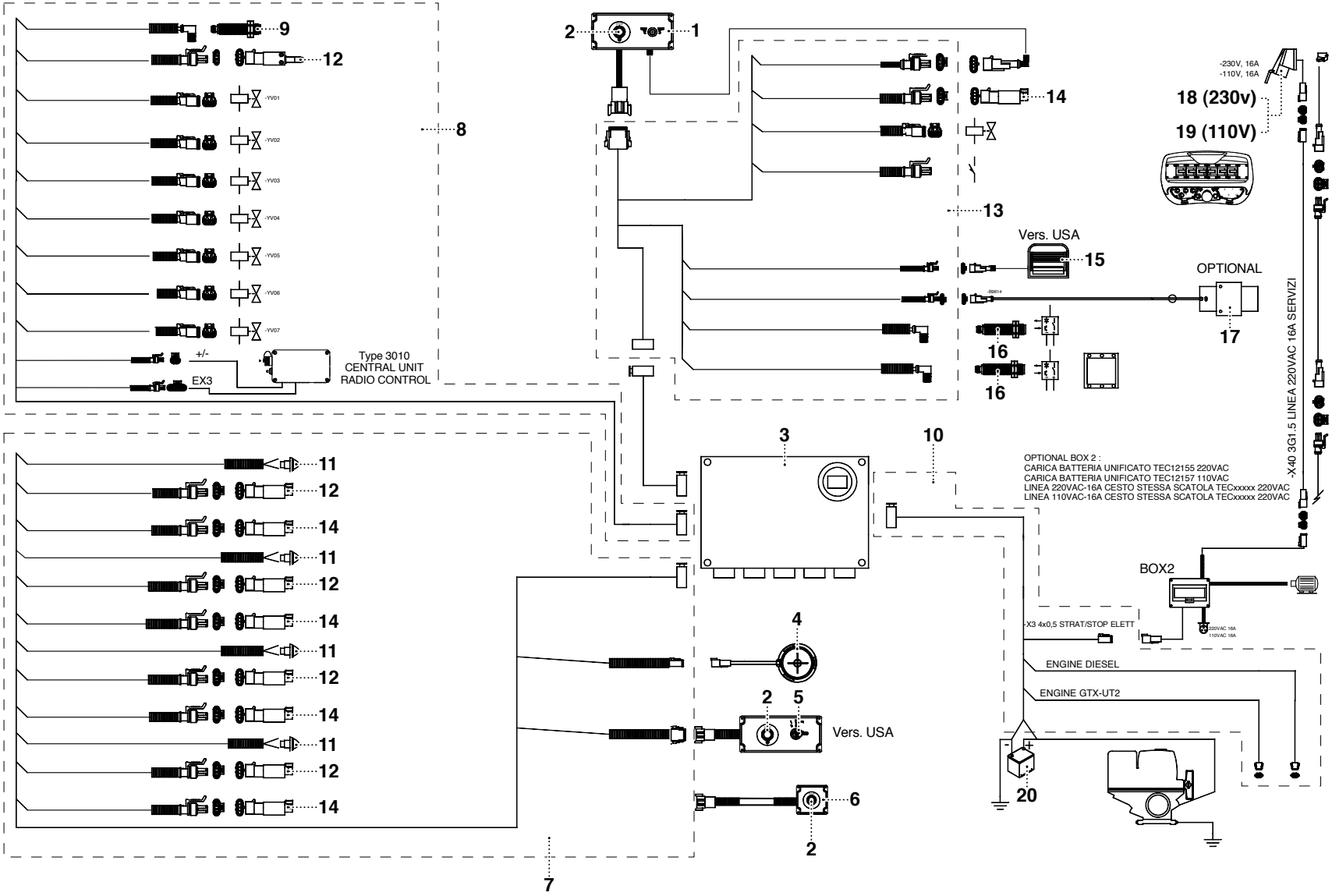

UN07-R-1417-DO

TAV. ON1.01.1.0

POS.	N° CODICE	Q.	DESCRIZIONE	DESIGNATION	BENENNUNG	DESCRIPTION	DENOMINACIONES
1	4.682.355	1	PULSANTIERA	TABLEAU DE COMMANDE	DRUCKTASTATUR	PUSHBUTTON BOARD	TABLERO PULSADORES
2	4.537.584	2	PULSANTE	BOUTON	DRUCKKNOPF	PUSH BUTTON	PULSADOR
3	4.682.347	1	UNITA' CONTROLLO	UNITE CONTROLE	KONTROLLEINHEIT	CONTROL UNIT	UNIDAD CONTROL
4	4.682.352	1	SENSORE	CAPTEUR	SENSOR	SENSOR	SENSOR
5	4.682.350	1	PULSANTIERA	TABLEAU DE COMMANDE	DRUCKTASTATUR	PUSHBUTTON BOARD	TABLERO PULSADORES
6	4.682.357	1	PULSANTIERA	TABLEAU DE COMMANDE	DRUCKTASTATUR	PUSHBUTTON BOARD	TABLERO PULSADORES
7	4.245.538	1	CABLAGGIO	CABLAGE	VERKABELUNG	SET WIRES	CABLEADO
8	4.245.539	1	CABLAGGIO	CABLAGE	VERKABELUNG	SET WIRES	CABLEADO
9	4.510.090	1	SENSORE	CAPTEUR	SENSOR	SENSOR	SENSOR
10	4.245.541	1	CABLAGGIO	CABLAGE	VERKABELUNG	SET WIRES	CABLEADO
11	4.635.018	4	INDICATORE LUMINOSO	LAMPTEMOIN	KONTROLLLAMPE	WARNING LIGHT	SENAL LUMINOSA
12	4.540.097	5	MICROINTERRUTTORE	MICRO INTERRUPTEUR	MIKROSCHALTER	MICRO SWITCH	MICRO-INTERRUPTOR
13	4.245.542	1	CABLAGGIO	CABLAGE	VERKABELUNG	SET WIRES	CABLEADO
14	4.540.096	5	MICROINTERRUTTORE	MICRO INTERRUPTEUR	MIKROSCHALTER	MICRO SWITCH	MICRO-INTERRUPTOR
15	4.540.085	1	PEDALE	PEDALE	PEDAL	PEDAL	PEDAL
16	4.510.091	2	SENSORE	CAPTEUR	SENSOR	SENSOR	SENSOR
17	4.540.032	1	MICROINTERRUTTORE	MICRO INTERRUPTEUR	MIKROSCHALTER	MICRO SWITCH	MICRO-INTERRUPTOR
18	4.534.079	1	PRESA ELETTRICA	PRISE DE COURANT	STECKDOSE	OUTLET	ENCHUFE
19	4.534.784	1	PRESA ELETTRICA	PRISE DE COURANT	STECKDOSE	OUTLET	ENCHUFE
20	4.170.040	1	BATTERIA	BATTERIE	BATTERIE	BATTERY	BATERIA

IMPIANTO ELETTRICO

INSTALLATION ELECTRIQUE — ELECTRIC SYSTEM
ELEKTRISCHE ANLAGE — INSTALACION ELECTRICA

TAV. ON2.01.1.0

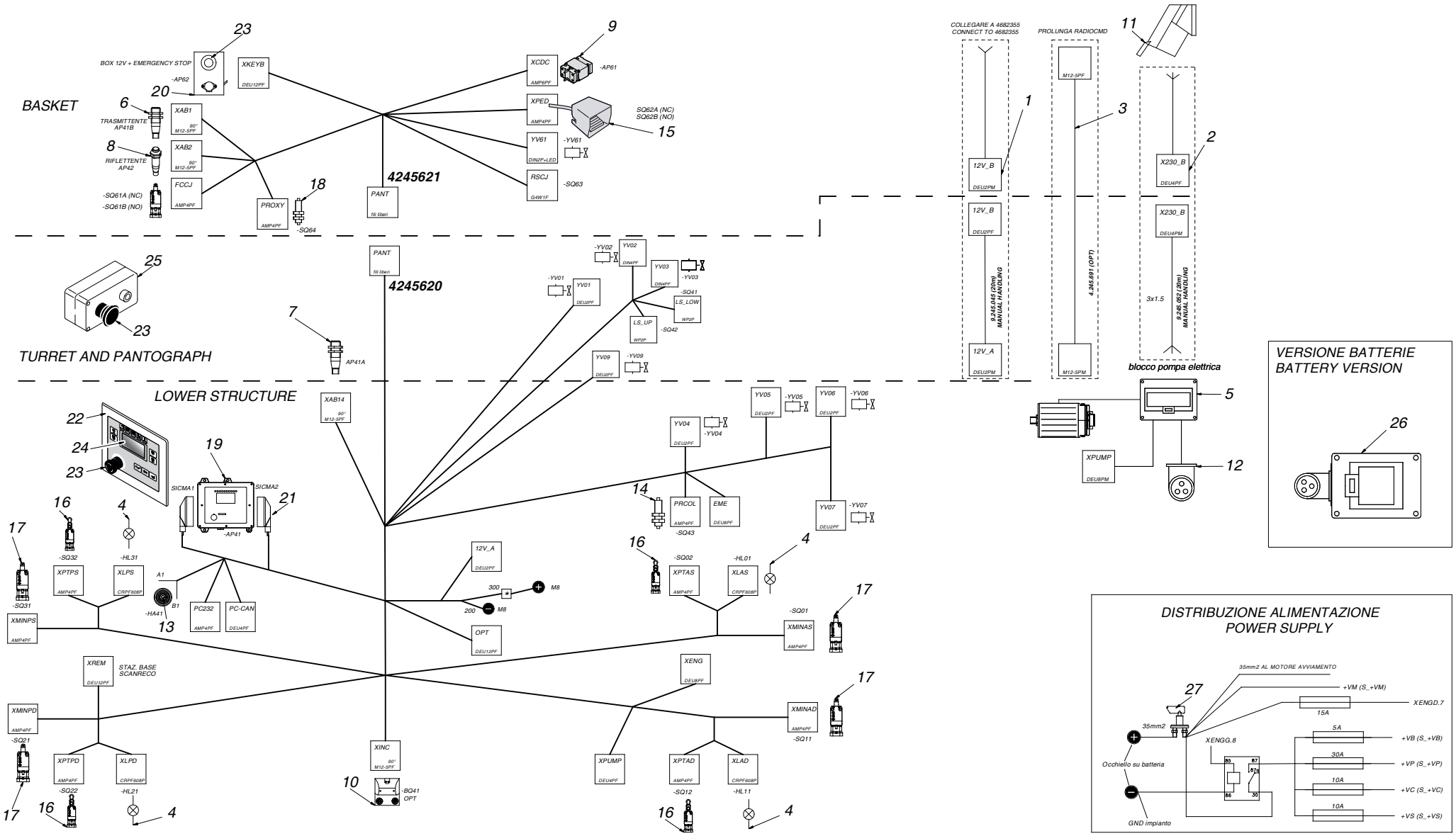

OS-R-A0597-ED

TAV. ON2.01.1.0

POS.	N° CODICE	Q.	DESCRIZIONE	DESIGNATION	BENENNUNG	DESCRIPTION	DENOMINACIONES
1	9.245.045	20	CAVO ELETTRICO	CABLE ELECTRIQUE	ELEKTROKABEL	ELECTRIC CABLE	CABLE ELECTRICO
2	9.245.052	20	CAVO ELETTRICO	CABLE ELECTRIQUE	ELEKTROKABEL	ELECTRIC CABLE	CABLE ELECTRICO
3	4.245.691	20	CAVO ELETTRICO	CABLE ELECTRIQUE	ELEKTROKABEL	ELECTRIC CABLE	CABLE ELECTRICO
4	4.365.018	1	INDICATORE LUMINOSO	LAMPTEMOIN	KONTROLLLAMPE	WARNING LIGHT	SENAL LUMINOSA
5	4.851.126	1	QUADRO ELETTRICO	PANNEAU ÉLECTR.	ELEKTRIKKONSOLE	ELECTRICAL PANEL	CUADRO ELÉCTRICO
	4534235	1	CASSETTA	BOITE	KASTEN	BOX	CAJA
	4.537.232	1	INT. MAGNETOTERMICO	DISJONCTEUR	LEISTUNGSSCHALTER	MAGNETOTERMIC SWITCH	INTERRUPTOR
	4.640.030	1	RELE 230V	RELAIS 230V	RELAY 230V	RELAY 230V	RELE 230V
	4.537.623	1	ZOCCOLO	BASE	BASE	BASE	BASE
	4.640.025	1	RELE 12V	RELAIS 12V	RELAY 12V	RELAY 12V	RELE 12V
	4.537.229	1	ZOCCOLO	BASE	BASE	BASE	BASE
	4.537.551	1	CONTATTORE 230V	CONTACTEUR 230V	KONTAKTGEBER 230V	CONTACTOR 230V	CONTACTOR 230V
		2	FERMO	ARRET	VERSTELLVORRICHTUNG	LOCK	TOPE
6	4.510.089	1	SENSORE	CAPTEUR	SENSOR	SENSOR	SENSOR
7	4.510.090	1	SENSORE	CAPTEUR	SENSOR	SENSOR	SENSOR
8	4.510.091	1	SENSORE	CAPTEUR	SENSOR	SENSOR	SENSOR
9	4.510.099	1	CELLA DI CARICO	CELLE DE CHARGEMENT	LASTZELLE	LOADING CELL	CAMARA DE CARGA
10	4.510.281	1	SENSORE	CAPTEUR	SENSOR	SENSOR	SENSOR
11	4.534.079	1	PRESA ELETTRICA	PRISE DE COURANT	STECKDOSE	OUTLET	ENCHUFE
12	4.534.163	1	SPINA ELETTRICA	BOUCHON	STECKER	PLUG	ENCHUFE
13	4.537.296	1	AVVISATORE ACUSTICO	AVERTISSEUR	HUPE	HORN	BOCINA
14	4.540.013	1	SENSORE	CAPTEUR	SENSOR	SENSOR	SENSOR
15	4.540.085	1	PEDALE	PEDALE	PEDAL	PEDAL	PEDAL
16	4.540.096	4	MICROINTERRUTTORE	MICRO INTERRUPTEUR	MIKROSCHALTER	MICRO SWITCH	MICRO-INTERRUPTOR
17	4.540.097	4	MICROINTERRUTTORE	MICRO INTERRUPTEUR	MIKROSCHALTER	MICRO SWITCH	MICRO-INTERRUPTOR

IMPIANTO ELETTRICO

INSTALLATION ELECTRIQUE — *ELECTRIC SYSTEM*
ELEKTRISCHE ANLAGE — *INSTALACION ELECTRICA*

TAV. ON2.01.1.0

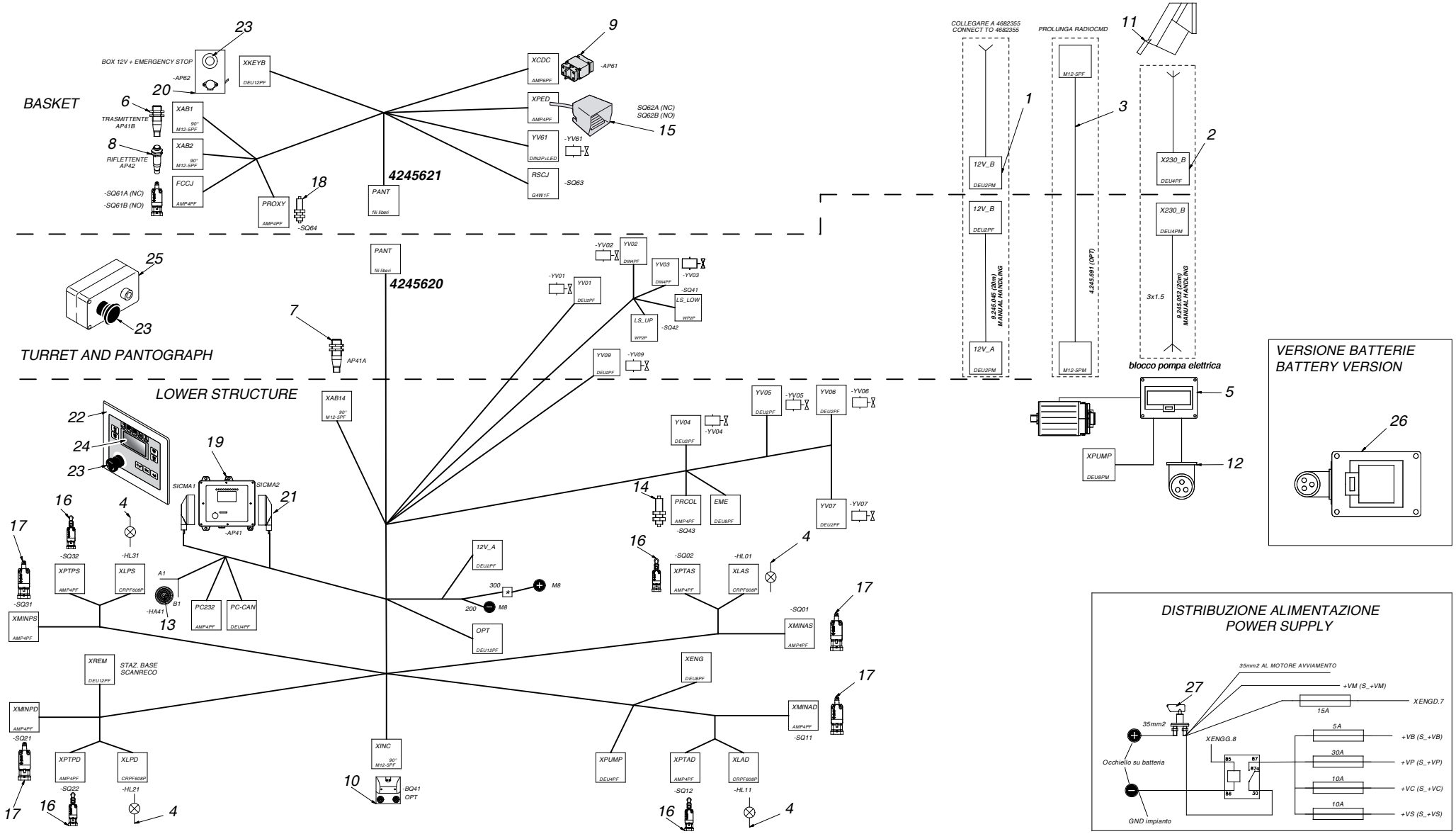

OS-R-A0597-ED

POS.	N° CODICE	Q.	DESCRIZIONE	DESIGNATION	BENENNUNG	DESCRIPTION	DENOMINACIONES
18	4.540.120	1	SENSORE	CAPTEUR	SENSOR	SENSOR	SENSOR
19	4.682.363	1	UNITA' CONTROLLO	UNITE CONTROLE	KONTROLLEINHEIT	CONTROL UNIT	UNIDAD CONTROL
20	4.682.447	1	PULSANTIERA	TABLEAU DE COMMANDE	DRUCKTASTATUR	PUSHBUTTON BOARD	TABLERO PULSADORES
21	4.537.639	2	CONNETTORE	CONNECTEUR	VERBINDER	CONNECTION	CONEXIO
22	4.682.443	1	COPERCHIO	COUVERCLE	DECKEL	COVER	TAPA
23	4.540.115	3	PULSANTE	BOUTON	DRUCKKNOPF	PUSH BUTTON	PULSADOR
24	4.510.300	1	DISPLAY	DISPLAY	DISPLAY	DISPLAY	DISPLAY
25	4.682.350	1	PULSANTIERA	TABLEAU DE COMMANDE	DRUCKTASTATUR	PUSHBUTTON BOARD	TABLERO PULSADORES
26	4.485.123	1	QUADRO ELETTRICO	PANNEAU ÉLECTR.	ELEKTRIKKONSOLE	ELECTRICAL PANEL	CUADRO ELÉCTRICO
	4.534.235	1	CASSETTA	BOITE	KASTEN	BOX	CAJA
	4.537.232	1	INT. MAGNETOTERMICO	DISJONCTEUR	LEISTUNGSSCHALTER	MAGNETOTERMIC SWITCH	INTERRUPTOR
	4.640.030	1	RELE 230V	RELAIS 230V	RELAY 230V	RELAY 230V	RELE 230V
	4.537.623	1	ZOCCOLO	BASE	BASE	BASE	BASE
	4.640.025	1	RELE 12V	RELAIS 12V	RELAY 12V	RELAY 12V	RELE 12V
	4.537.229	1	ZOCCOLO	BASE	BASE	BASE	BASE
	4.537.551	1	CONTATTORE 230V	CONTACTEUR 230V	KONTAKTGEBER 230V	CONTACTOR 230V	CONTACTOR 230V
		2	FERMO	ARRET	VERSTELLVORRICHTUNG	LOCK	TOPE
	4.534.163	1	SPINA ELETTRICA	BOUCHON	STECKER	PLUG	ENCHUFE
27	4.534.166	1	INTERRUTTORE	INTERRUPTEUR	SCHALTER	SWITCH	INTERRUPTOR

COMANDI A DISTANZA

COMMANDES A DISTANCE *REMOTE CONTROLS*
FERNSTEUERUNGEN *MANDOS A DISTANCIA*

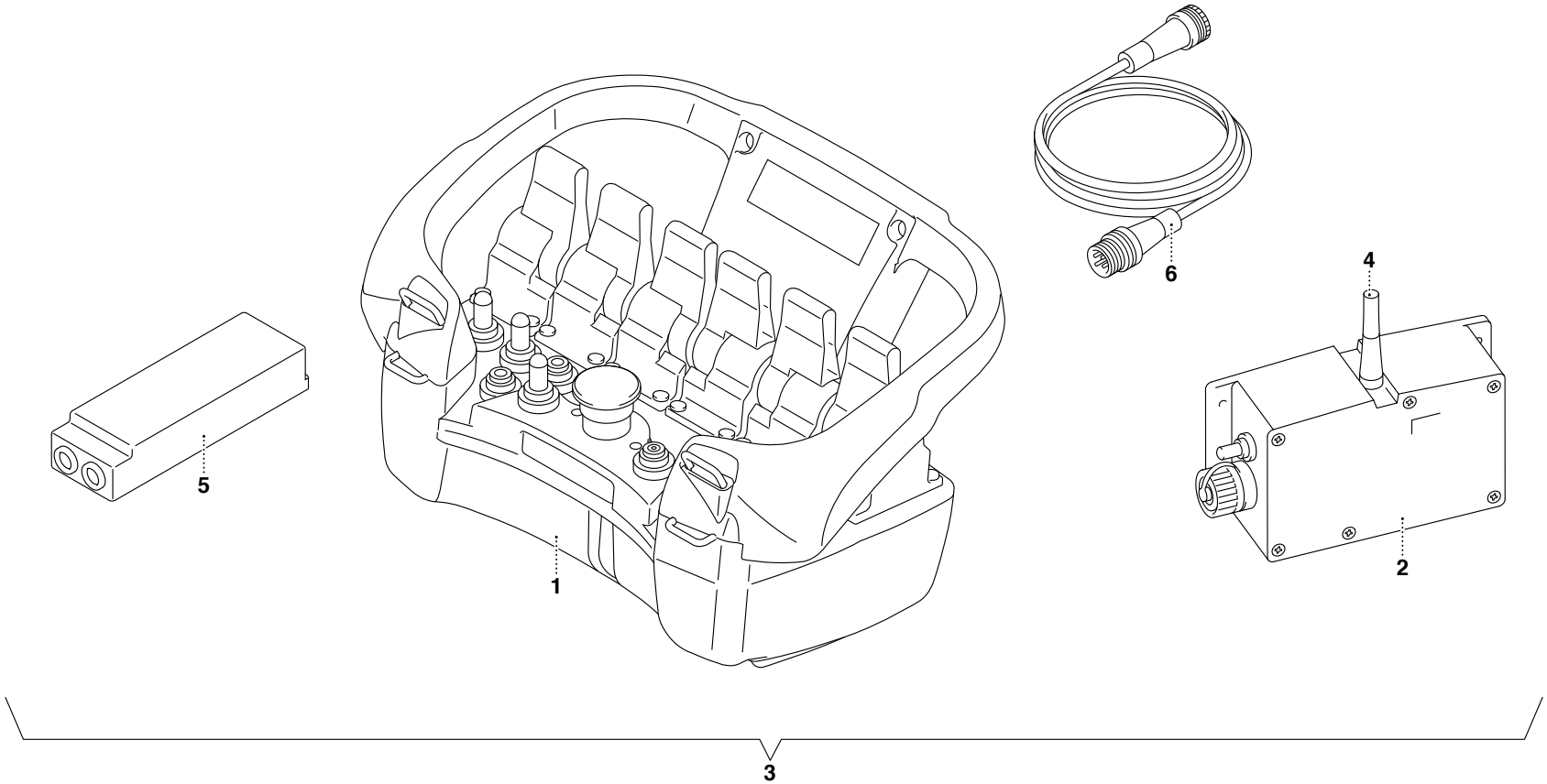

TAV. ON3.01.1.0

POS.	N° CODICE	Q.	DESCRIZIONE	DESIGNATION	BENENNUNG	DESCRIPTION	DENOMINACIONES
1	4.755.049	1	PULSANTIERA	TABLEAU DE COMMANDE	DRUCKTASTATUR	PUSHBUTTON BOARD	TABLERO PULSADORES
2	4.755.050	1	UNITA' CONTROLLO	UNITE CONTROLE	KONTROLLEINHEIT	CONTROL UNIT	UNIDAD CONTROL
3	3.921.975	1	RADIOCOMANDO	RADIOCOMMANDE	FUNKSTEUERUNG	RADIO CONTROL	RADIO MANDO
4	4.245.664	1	ANTENNA	ANTENNE	ANTENNE	ANTENNA	ANTENA
5	4.755.071	1	BATTERIA	BATTERIE	BATTERIE	BATTERY	BATERIA
6	4.245.503	1	CAVO	CABLE	KABEL	CABLE	CABLE

CONNETTORI

CONNECTEURS
VERBINDER

CONNECTIONS
CONEXIONES

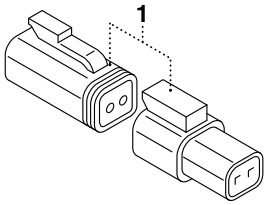

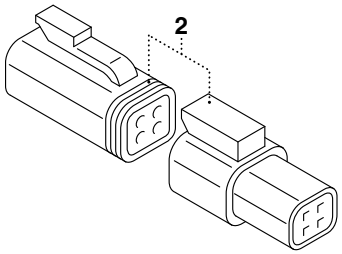

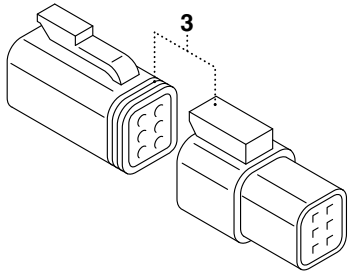

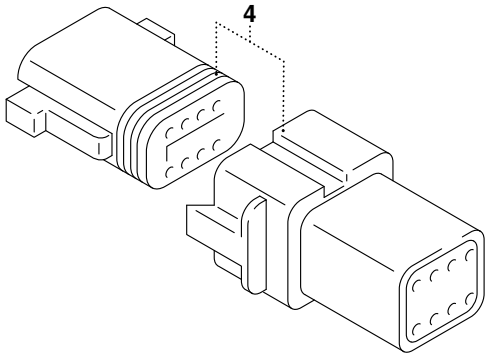

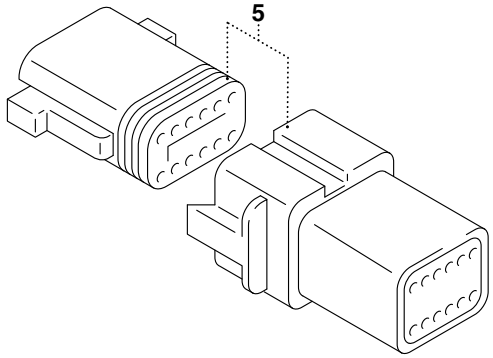

TAV. ON4.01.1.0

POS.	N° CODICE	Q.	DESCRIZIONE	DESIGNATION	BENENNUNG	DESCRIPTION	DENOMINACIONES
1	3.723.279	1	CONNETTORE COMPLETO	CONNECTEUR COMPLET	KOMPLETTVERBINDER	COMPLETE CONNECTION	CONEXION COMPLETA
2	3.723.280	1	CONNETTORE COMPLETO	CONNECTEUR COMPLET	KOMPLETTVERBINDER	COMPLETE CONNECTION	CONEXION COMPLETA
3	3.723.281	1	CONNETTORE COMPLETO	CONNECTEUR COMPLET	KOMPLETTVERBINDER	COMPLETE CONNECTION	CONEXION COMPLETA
4	3.723.282	1	CONNETTORE COMPLETO	CONNECTEUR COMPLET	KOMPLETTVERBINDER	COMPLETE CONNECTION	CONEXION COMPLETA
5	3.723.283	1	CONNETTORE COMPLETO	CONNECTEUR COMPLET	KOMPLETTVERBINDER	COMPLETE CONNECTION	CONEXION COMPLETA

CONNETTORI (AMP)

CONNECTEURS (AMP)
VERBINDER (AMP)
CONNECTIONS (AMP)
CONEXIONES (AMP)

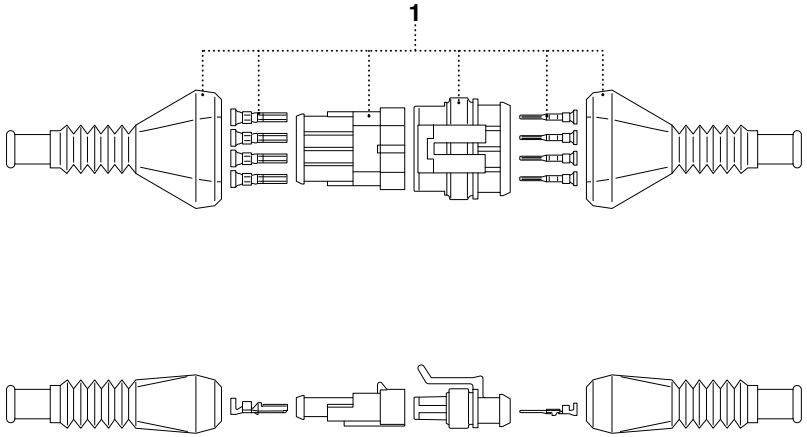

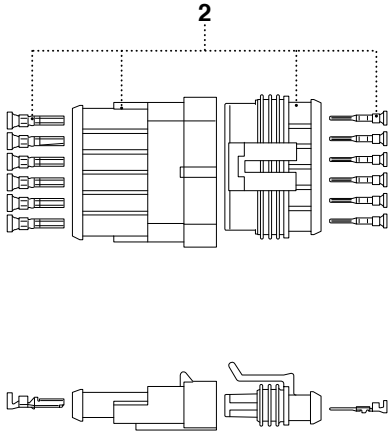

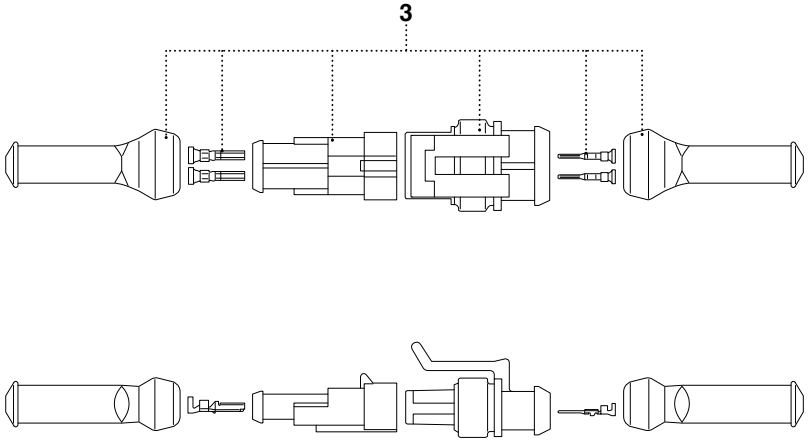

TAV. ON5.01.1.0

POS.	N° CODICE	Q.	DESCRIZIONE	DESIGNATION	BENENNUNG	DESCRIPTION	DENOMINACIONES
1	3.723.944	1	CONNETTORE COMPLETO	CONNECTEUR COMPLET	KOMPLETTVERBINDER	COMPLETE CONNECTION	CONEXION COMPLETA
2	3.723.945	1	CONNETTORE COMPLETO	CONNECTEUR COMPLET	KOMPLETTVERBINDER	COMPLETE CONNECTION	CONEXION COMPLETA
3	3.723.943	1	CONNETTORE COMPLETO	CONNECTEUR COMPLET	KOMPLETTVERBINDER	COMPLETE CONNECTION	CONEXION COMPLETA

CONNETTORI (M12)

CONNECTEURS (M12)
VERBINDER (M12)
CONNECTIONS (M12)
CONEXIONES (M12)

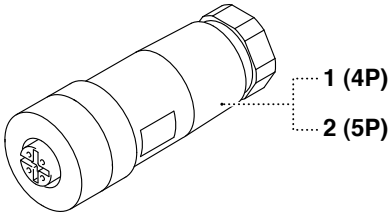

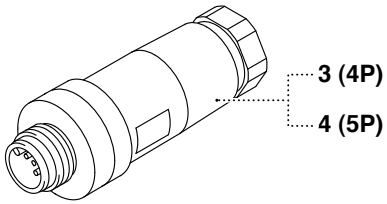

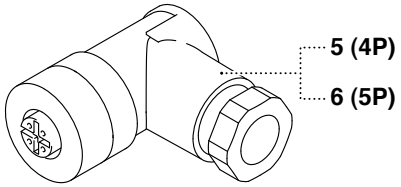

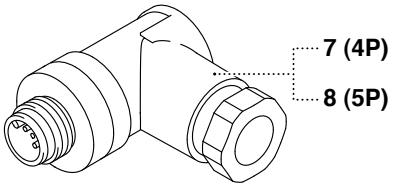

TAV. ON6.01.1.0

POS.	N° CODICE	Q.	DESCRIZIONE	DESIGNATION	BENENNUNG	DESCRIPTION	DENOMINACIONES
1	4.534.319	1	CONNETTORE	CONNECTEUR	VERBINDER	CONNECTION	CONEXION
2	4.534.903	1	CONNETTORE	CONNECTEUR	VERBINDER	CONNECTION	CONEXION
3	4.534.320	1	CONNETTORE	CONNECTEUR	VERBINDER	CONNECTION	CONEXION
4	4.534.880	1	CONNETTORE	CONNECTEUR	VERBINDER	CONNECTION	CONEXION
5	4.534.317	1	CONNETTORE	CONNECTEUR	VERBINDER	CONNECTION	CONEXION
6	4.534.881	1	CONNETTORE	CONNECTEUR	VERBINDER	CONNECTION	CONEXION
7	4.534.318	1	CONNETTORE	CONNECTEUR	VERBINDER	CONNECTION	CONEXION
8	4.534.870	1	CONNETTORE	CONNECTEUR	VERBINDER	CONNECTION	CONEXION

OIL&STEEL

TARGHETTE

AUTOCOLLANTS
SCHILDER

DECALS
ETIQUETAS

TAV. OQ1.01.1.0

octopus 14

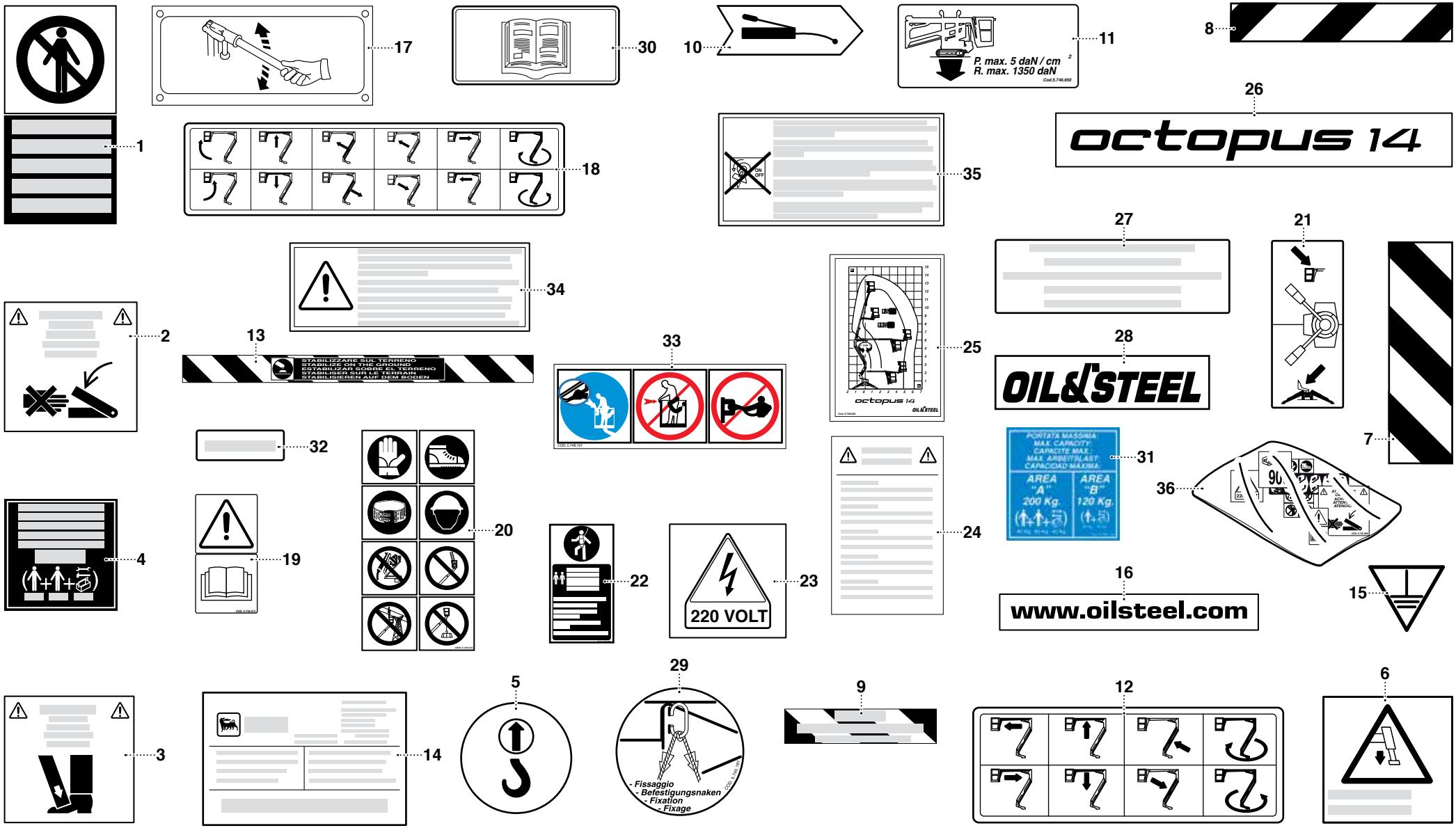

UN07-R-1420-DO

TAV. OQ1.01.1.0

POS.	N° CODICE	Q.	DESCRIZIONE	DESIGNATION	BENENNUNG	DESCRIPTION	DENOMINACIONES
1	5.747.897	2	TARGHETTA	AUTOCOLLANT	SCHILD	DECAL	ETIQUETA
2	5.745.008	4	TARGHETTA	AUTOCOLLANT	SCHILD	DECAL	ETIQUETA
3	5.745.009	6	TARGHETTA	AUTOCOLLANT	SCHILD	DECAL	ETIQUETA
4	5.745.136	3	TARGHETTA	AUTOCOLLANT	SCHILD	DECAL	ETIQUETA
5	5.745.071	4	TARGHETTA	AUTOCOLLANT	SCHILD	DECAL	ETIQUETA
6	5.746.649	4	TARGHETTA	AUTOCOLLANT	SCHILD	DECAL	ETIQUETA
7	5.745.123	4	TARGHETTA	AUTOCOLLANT	SCHILD	DECAL	ETIQUETA
8	5.745.124	2	TARGHETTA	AUTOCOLLANT	SCHILD	DECAL	ETIQUETA
9	5.745.938	1	TARGHETTA	AUTOCOLLANT	SCHILD	DECAL	ETIQUETA
10	5.745.004	1	TARGHETTA	AUTOCOLLANT	SCHILD	DECAL	ETIQUETA
11	5.746.650	2	TARGHETTA	AUTOCOLLANT	SCHILD	DECAL	ETIQUETA
12	5.745.363	1	TARGHETTA	AUTOCOLLANT	SCHILD	DECAL	ETIQUETA
13	5.745.902	8	TARGHETTA	AUTOCOLLANT	SCHILD	DECAL	ETIQUETA
14	5.747.899	1	TARGHETTA	AUTOCOLLANT	SCHILD	DECAL	ETIQUETA
15	5.745.265	1	TARGHETTA	AUTOCOLLANT	SCHILD	DECAL	ETIQUETA
16	5.745.937	2	TARGHETTA	AUTOCOLLANT	SCHILD	DECAL	ETIQUETA
17	5.747.902	1	TARGHETTA	AUTOCOLLANT	SCHILD	DECAL	ETIQUETA
18	5.745.189	1	TARGHETTA	AUTOCOLLANT	SCHILD	DECAL	ETIQUETA
19	5.745.013	1	TARGHETTA	AUTOCOLLANT	SCHILD	DECAL	ETIQUETA
20	5.745.930	1	TARGHETTA	AUTOCOLLANT	SCHILD	DECAL	ETIQUETA
21	5.745.391	1	TARGHETTA	AUTOCOLLANT	SCHILD	DECAL	ETIQUETA
22	5.746.410	2	TARGHETTA	AUTOCOLLANT	SCHILD	DECAL	ETIQUETA
23	5.745.264	2	TARGHETTA	AUTOCOLLANT	SCHILD	DECAL	ETIQUETA
24	5.747.904	1	TARGHETTA	AUTOCOLLANT	SCHILD	DECAL	ETIQUETA
25	5.747.928	1	TARGHETTA	AUTOCOLLANT	SCHILD	DECAL	ETIQUETA

OIL&STEEL

TARGHETTE

AUTOCOLLANTS
SCHILDER

DECALS
ETIQUETAS

TAV. OQ1.01.1.0

octopus 14

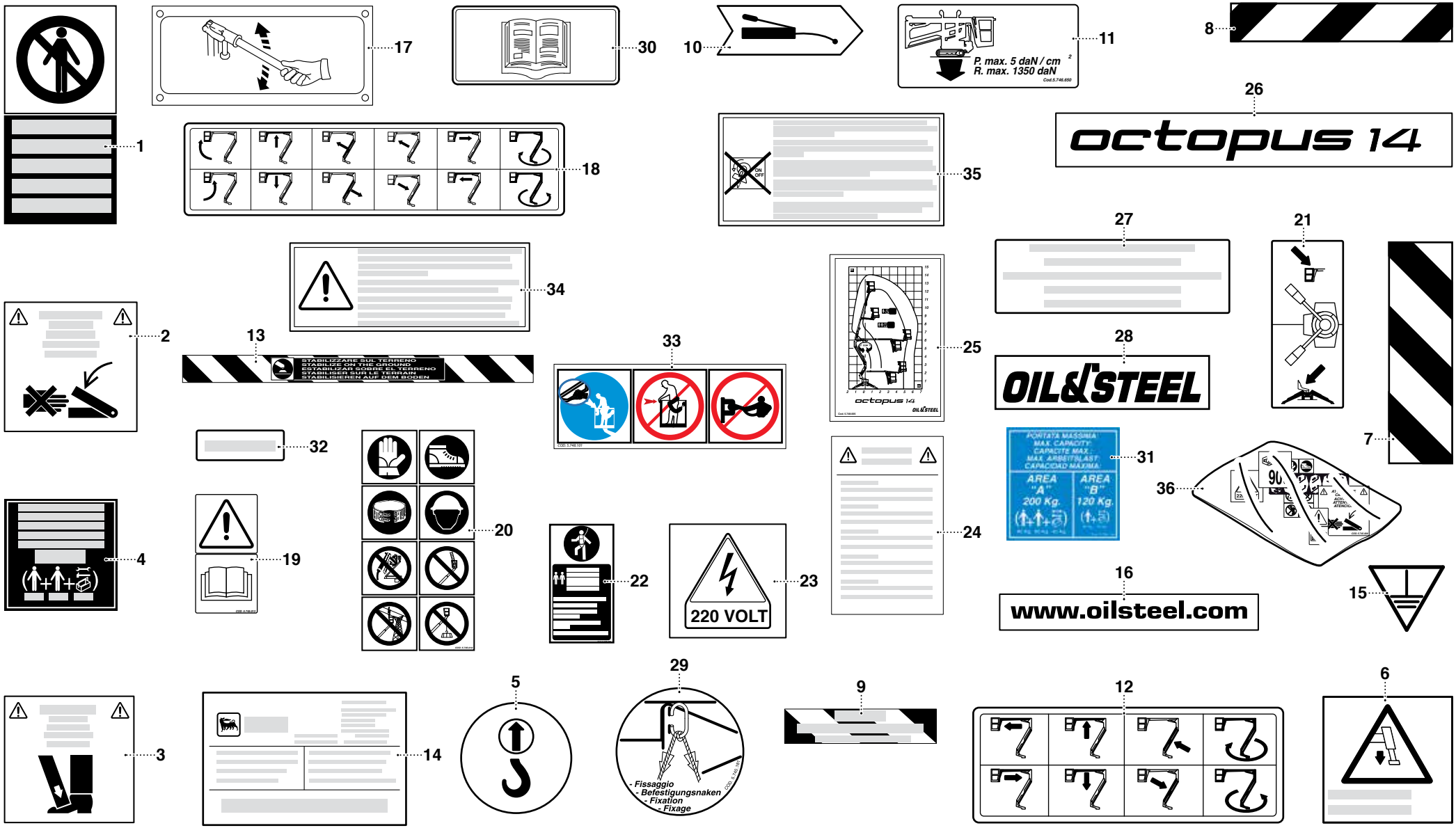

UN07-R-1420-DO

POS.	N° CODICE	Q.	DESCRIZIONE	DESIGNATION	BENENNUNG	DESCRIPTION	DENOMINACIONES
26	5.747.917	2	TARGHETTA	AUTOCOLLANT	SCHILD	DECAL	ETIQUETA
27	5.745.081	1	TARGHETTA	AUTOCOLLANT	SCHILD	DECAL	ETIQUETA
28	5.745.935	2	TARGHETTA	AUTOCOLLANT	SCHILD	DECAL	ETIQUETA
29	5.745.181	1	TARGHETTA	AUTOCOLLANT	SCHILD	DECAL	ETIQUETA
30	5.746.933	1	TARGHETTA	AUTOCOLLANT	SCHILD	DECAL	ETIQUETA
31	5.745.144	3	TARGHETTA	AUTOCOLLANT	SCHILD	DECAL	ETIQUETA
32	5.747.903	2	TARGHETTA	AUTOCOLLANT	SCHILD	DECAL	ETIQUETA
33	5.748.101	1	TARGHETTA	AUTOCOLLANT	SCHILD	DECAL	ETIQUETA
34	5.747.958	1	TARGHETTA	AUTOCOLLANT	SCHILD	DECAL	ETIQUETA
35	5.748.006	1	TARGHETTA	AUTOCOLLANT	SCHILD	DECAL	ETIQUETA
36	3.488.804	1	KIT TARGHETTE	KIT AUTOCOLLANTS	SCHILDESATZ	DECALS KIT	KIT ETIQUETAS

ACCESSORI

ACCESSORIES

AUSTATTUNG

ACCESSOIRES

ACCESORIOS

OIL&STEEL

ELETTROPOMPA - OPZIONALE

ELECTROPOMPE - OPTION
ELEKTROPUMPE - ZUBEHÖR
ELECTRO PUMP - OPTIONAL
ELECTRO BOMBA - OPCIONAL

TAV. OV1.01.1.0

octopus 14

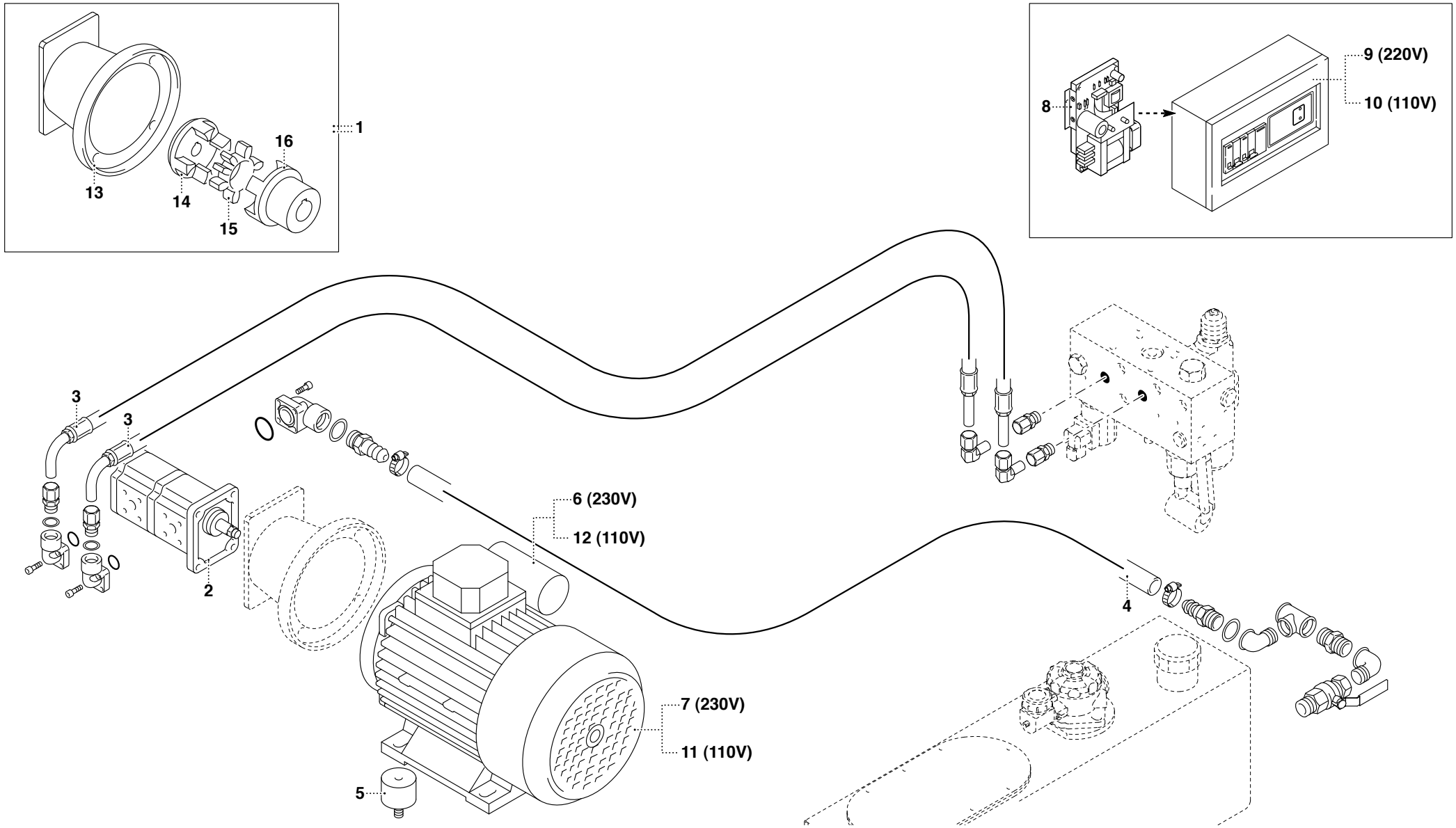

UN07-R-1421-DO

TAV. OV1.01.1.0

POS.	N° CODICE	Q.	DESCRIZIONE	DESIGNATION	BENENNUNG	DESCRIPTION	DENOMINACIONES
1	3.921.900	1	KIT LANTERNA	KIT LANTERNE	LATERNESATZ	LANTERN KIT	KIT LINTERNA
2	4.610.215	1	POMPA	POMPE	PUMPE	PUMP	BOMBA
3	5.787.555	2	TUBO FLESSIBILE	TUYAU FLEXIBLE	SCHLAUCH	FLEXIBLE HOSE	TUBO FLEXIBLE
4	9.785.042	1	TUBO FLESSIBILE	TUYAU FLEXIBLE	SCHLAUCH	FLEXIBLE HOSE	TUBO FLEXIBLE
5	4.125.072	4	ANTIVIBRANTE	PLOT ELASTIQUE	SCHWINGUNGSDAMPFER	PAD	ANTIVIBRANTE
6	4.534.785	1	CONDENSATORE	CONDENSATEUR	KONDENSATOR	CONDENSATOR	CONDENSADOR
7	4.554.041	1	MOTORE	MOTEUR	MOTOR	MOTOR	MOTOR
8		1	SCHEDA ELETTRONICA	FICHE ELECTRONIQUE	ELEKTRONIKKARTE	ELECTRONIC CARD	ESQUELA ELECTRONICA
9	4.625.112	1	QUADRO ELETTRICO	PUPITRE ELECTRIQUE	SCHALTTAFEL	ELECTRIC BOARD	TABLERO ELECTRICO
10	4.625.113	1	QUADRO ELETTRICO	PUPITRE ELECTRIQUE	SCHALTTAFEL	ELECTRIC BOARD	TABLERO ELECTRICO
11	4.554.033	1	MOTORE	MOTEUR	MOTOR	MOTOR	MOTOR
12		1	CONDENSATORE	CONDENSATEUR	KONDENSATOR	CONDENSATOR	CONDENSADOR
13	4.390.114	1	LANTERNA	LANTERNE	LATERNE	LANTERN	LINTERNA
14	4.488.895	1	GIUNTO	COUPLER	GELENK	COUPLING	ACOPLAMIENTO
15	4.488.894	1	RUOTA	ROUE	RAD	WHEEL	RUEDA
16	4.488.893	1	GIUNTO	COUPLER	GELENK	COUPLING	ACOPLAMIENTO

IMPORTANTE

Le informazioni ed i dati contenuti in questa pubblicazione erano esatti ed aggiornati al momento della stampa. E' nostra consuetudine cercare di migliorare il prodotto e di conseguenza alcune modifiche costruttive possono interessare le procedure descritte. Quando si notino delle differenze eliminare ogni dubbio rivolgendosi ad un Centro di vendita e assistenza.

IMPORTANT

Les renseignements et les données de cette publication étaient exactes et à jour au moment de l'impression. Toujours soucieux d'améliorer nos produits, les procédés décrits peuvent donc subir des modifications de fabrication. Au cas où vous remarqueriez des différences, veuillez vous adresser à un Centre de vente et Service après-vente pour éliminer toute possibilité de doute.

WICHTIG

Die in vorliegender Veröffentlichung enthaltenen Informationen und Daten waren zur Zeit des Drucklegung korrekt und auf dem neuesten Stand. Da wir unsere Produkte fortwährend verbessern, kann es aufgrund von Konstruktionsänderungen zu Änderungen der beschriebenen Verfahren kommen. Falls Abweichungen auftreten, wenden Sie sich bitte zur Vermeidung von Unklarheiten an ein Verkaufs-und Servicezentrum.

IMPORTANT

Information and data contained in this publication are correct and up to date at the time of printing. The company does, however, continually try to improve the products and such improvements may give rise to structural changes requiring modifications in the above procedures. Should any differences be noted, please contact your nearest sales and assistance centre for help in clearing up any possible doubts.

IMPORTANTE

Las informaciones y los datos contenidos en esta publicación son exactos y actualizados hasta el momento de la impresión. Es nuestra norma tratar de mejorar el producto, consecuentemente algunas modificaciones constructivas pueden afectar los procedimientos descritos. Cuando se noten diferencias eliminar cualquier duda dirigiéndose a un Centro de Venta y Asistencia.

OIL&STEEL

OIL & STEEL SPA
Sede legale: Via G. Verdi, 22
41018 SAN CESARIO S/P (Mo) - Italy

Tel. +39 059.93.68.11
Fax +39 059.93.68.00
http://www.oilsteel.com
e-mail: info@oilsteel.com

©Tutti i diritti riservati

Realizzato da **Unistudio** - Modena